Smoke and heat control systems

Part 2: Specification for natural smoke and heat exhaust ventilators
English version of DIN EN 12101-2

DIN EN 12101-2

ICS 13.220.99

Supersedes DIN 18232-3, September 1984 edition.

Rauch- und Wärmefreihaltung – Teil 2: Festlegungen für natürliche Rauch- und Wärmeabzugsgeräte

European Standard EN 12101-2 : 2003 has the status of a DIN Standard.

A comma is used as the decimal marker.

National foreword

This standard has been prepared by CEN/TC 191 'Fixed firefighting systems' (Secretariat: United Kingdom).

The responsible German body involved in its preparation was the *Normenausschuss Bauwesen* (Building and Civil Engineering Standards Committee), Technical Committee 00.35.00 *Rauch- und Wärmeabzug bei Bränden*.

Amendments

DIN 18232-3, September 1984 edition, has been superseded by the specifications of EN 12101-2.

Previous edition

DIN 18232-3: 1984-09.

EN comprises 39 pages.

Ref. No. DIN EN 12101-2 : 2003-09
English price group 14 *Sales No. 1114*
01.04

EUROPEAN STANDARD
NORME EUROPÉENNE
EUROPÄISCHE NORM

EN 12101-2

June 2003

ICS 13.220.20; 23.120

English version

Smoke and heat control systems

Part 2: Specification for natural smoke and heat exhaust ventilators

Systèmes pour le contrôle des fumées et de la chaleur – Partie 2: Spécifications pour les dispositifs d'évacuation de fumées et de chaleur

Rauch- und Wärmefreihaltung – Teil 2: Festlegungen für natürliche Rauch- und Wärmeabzugsgeräte

This European Standard was approved by CEN on 2003-04-09.

CEN members are bound to comply with the CEN/CENELEC Internal Regulations which stipulate the conditions for giving this European Standard the status of a national standard without any alteration.

Up-to-date lists and bibliographical references concerning such national standards may be obtained on application to the Management Centre or to any CEN member.

The European Standards exist in three official versions (English, French, German). A version in any other language made by translation under the responsibility of a CEN member into its own language and notified to the Management Centre has the same status as the official versions.

CEN members are the national standards bodies of Austria, Belgium, the Czech Republic, Denmark, Finland, France, Germany, Greece, Hungary, Iceland, Ireland, Italy, Luxembourg, Malta, the Netherlands, Norway, Portugal, Slovakia, Spain, Sweden, Switzerland, and the United Kingdom.

CEN

European Committee for Standardization
Comité Européen de Normalisation
Europäisches Komitee für Normung

Management Centre: rue de Stassart 36, B-1050 Brussels

Ref. No. EN 12101-2 : 2003 E

Contents

Foreword

This document EN 12101-2:2003 has been prepared by CEN /TC 191, "Smoke and heat control systems", the secretariat of which is held by BSI.

This European Standard shall be given the status of a national standard, either by publication of an identical text or by endorsement, at the latest by September 2003, and conflicting national standards shall be withdrawn at the latest by September 2005.

This document has been prepared under a mandate given to CEN by the European Commission and the European Free Trade Association, and supports essential requirements of EU Directive(s).

For relationship with EU Directive(s), see informative annex ZA, which is an integral part of this document.

This European Standard is one of ten parts of the European Standard EN 12101 covering smoke and heat control systems.

This European Standard has the general title *Smoke and heat control systems* and consists of the following six parts:

Part 1: *Specification for smoke barriers — Requirements and test methods*

Part 2: *Specification for natural smoke and heat exhaust ventilators*

Part 3: *Specification for powered smoke and heat exhaust ventilators*

Part 4: *Natural smoke and heat exhaust ventilation systems — Installation and test methods*

Part 5: *Design and calculation for smoke and exhaust ventilation systems (published as CR 12101-5)*

Part 6: *Design and calculation methods and installation procedure for pressure differential smoke control systems*

Part 7: *Specification for smoke ducts*

Part 8: *Specification for smoke dampers*

Part 9*: Specification for control panels and emergency control panels*

Part 10*: Specification for power supplies*

EN 12101 is included in a series of European Standards planned to cover also:

- Gas extinguishing systems (EN 12094 and ISO 14520-1)
- Sprinkler systems (EN 12259)
- Powder systems (EN 12416)
- Explosion protection systems (EN 26184)
- Foam systems (EN 13565)
- Hose systems (EN 671)
- Water spray systems

Annexes A, B, C, D, E, F and G are normative.

This document includes a Bibliography.

According to the CEN/CENELEC Internal Regulations, the national standards organizations of the following countries are bound to implement this European Standard : Austria, Belgium, Czech Republic, Denmark, Finland, France, Germany, Greece, Hungary, Iceland, Ireland, Italy, Luxembourg, Malta, Netherlands, Norway, Portugal, Slovakia, Spain, Sweden, Switzerland and the United Kingdom.

Introduction

In a fire situation, smoke and heat exhaust ventilation systems create and maintain a smoke free layer above the floor by removing smoke. They also serve simultaneously to exhaust hot gases released by a fire in the developing stages. The use of such systems to create smoke-free areas beneath a buoyant layer has become widespread. Their value in assisting in the evacuation of people from buildings and other construction works, reducing fire damage and financial loss by preventing smoke damage, facilitating access for firefighting by improving visibility, reducing roof temperatures and retarding the lateral spread of fire is firmly established. For these benefits to be obtained it is essential that smoke and heat exhaust ventilators operate fully and reliably whenever called upon to do so during their installed life. A smoke and heat exhaust ventilation system (referred to in this standard as a SHEVS) is a system of safety equipment intended to perform a positive role in a fire emergency.

1 Scope

This part of this European Standard specifies requirements and gives test methods for natural smoke and heat exhaust ventilators which are intended to be installed as a component of a natural smoke and heat exhaust system.

2 Normative references

This European Standard incorporates by dated or undated reference, provisions from other publications. These normative references are cited at the appropriate places in the text, and the publications are listed hereafter. For dated references, subsequent amendments to or revisions of any of these publications apply to this European Standard only when incorporated in it by amendment or revision. For undated references the latest edition of the publication referred to applies (including amendments).

EN 54-7, *Fire detection and fire alarm systems - Part 7: Smoke detectors - Point detectors using scattered light, transmitted light or ionization.*

EN 1363-1, *Fire resistance tests - Part 1: General requirements.*

EN 12259-1, *Fixed firefighting systems - Components for sprinkler and water spray systems - Part 1: Sprinklers.*

EN 13501-1, *Fire classification of construction products and building elements - Part 1: Classification using test data from reaction to fire tests.*

EN 60584-1, *Thermocouples - Part 1: Reference tables (IEC 60584-1:1995).*

3 Terms and definitions, symbols and abbreviations

3.1 Terms and definitions

For the purposes of this European Standard, the following terms and definitions apply.

3.1.1
aerodynamic efficiency
another term for coefficient of discharge (see 3.1.8)

3.1.2
aerodynamic free area
product of the geometric area multiplied by the coefficient of discharge

3.1.3
ambient
word used to describe properties of the surroundings

3.1.4
automatic activation
initiation of operation without direct human intervention

3.1.5
aspect ratio
ratio of length to width

3.1.6
automatic natural smoke and heat exhaust ventilator
smoke and heat exhaust ventilator which is designed to open automatically after the outbreak of fire if called upon to do so

NOTE Automatic natural smoke and heat exhaust ventilators can also be fitted with a manual control or release device.

3.1.7
coefficient of discharge
ratio of actual flow rate, measured under specified conditions, to the theoretical flow rate through the ventilator (c_V), as defined in annex B

NOTE The coefficient takes into account any obstructions in the ventilator such as controls, louvers and vanes and the effect of external side winds.

3.1.8
dual purpose ventilator
smoke and heat exhaust ventilator which has provision to allow its use for comfort (i.e. day to day) ventilation

3.1.9
exhaust ventilator
device for the movement of gases out of the construction works

3.1.10
fire open position
configuration of the ventilator specified by its designer to be achieved and sustained while venting smoke and heat

3.1.11
gas container
vessel containing gas in a compressed form, the energy of which, when released, will open the ventilator

3.1.12
geometric area (A_v)
area of the opening through a ventilator, measured in the plane defined by the surface of the construction works, where it contacts the structure of the ventilator. No reduction will be made for controls, louvers or other obstructions

3.1.13
initiation device
device which activates the operating mechanism of the component (e.g. of a damper or a ventilator) on receipt of information from a fire detection system or thermal device

3.1.14
manual operation
initiation of the operation of a smoke and heat exhaust ventilator by a human action (e.g. pressing a button, or pulling a handle). A sequence of automatic actions in the operation of a smoke and heat exhaust ventilator started by the initial human action is regarded as manual operation for the purposes of this standard

3.1.15
manually opened natural smoke and heat exhaust ventilator
natural smoke and heat exhaust ventilator that can only be opened by a manual control or release device

3.1.16
mass flux
the total mass of gases crossing a specified boundary per unit time

3.1.17
natural ventilation
ventilation caused by buoyancy forces due to differences in density of the gases because of temperature differences

3.1.18
opening mechanism
mechanical device which operates the ventilator to the fire open position

3.1.19
opening time
period between the information to open being received by the ventilators and achieving the fire open position of the ventilator

3.1.20
projection area
cross sectional area of the natural smoke and heat exhaust ventilator in its fire open position above the plane of the roof, at a right angle to the side wind flow

3.1.21
range of natural smoke and heat exhaust ventilators
ventilators of various sizes having the same method of construction (identical number of hinges on a louver blade or flap, identical materials and thickness, etc.) and the identical number and type of opening devices

3.1.22
smoke and heat control system
arrangement of components installed in a construction works to limit the effects of smoke and heat from a fire

3.1.23
smoke and heat exhaust system
smoke and heat control system which exhausts smoke and heat from a fire in a construction works or part of a construction works

3.1.24
smoke and heat exhaust ventilation system (shevs)
components jointly selected to exhaust smoke and heat in order to establish a buoyant layer of warm gases above cooler and cleaner air

3.1.25
smoke and heat exhaust ventilator
device specially designed to move smoke and hot gases out of a construction works under conditions of fire

3.1.26
thermal device
temperature sensitive device which responds to initiate a subsequent action

3.1.27
throat area
smallest cross sectional area of the flow path through the ventilator

3.1.28
ventilator
device for enabling the movement of gases into or out of the construction works

3.1.29
wind sensitive control system
control system designed to control two or more banks of ventilators on separate elevations so that only the ventilators not subject to positive wind pressures open in case of fire

3.2 Symbols and abbreviations

For the purposes of this standard, mathematical and physical quantities are represented by symbols, and expressed in units as follows.

Symbol	Quantity	
A_a	aerodynamic free area, expressed in square metres	(m^2)
A_n	nozzle exit area (for open jet facilities); test section entrance area (for closed test section facilities), expressed in square metres	(m^2)
A_{pr}	projection area of the ventilator for the side wind flow, expressed in square metres	(m^2)
A_{sc}	horizontal cross section area of the settling chamber, expressed in square metres	(m^2)
A_v	geometric area of the ventilator, expressed in square metres	(m^2)
B	width of the open hole of the settling chamber, expressed in metres	(m)
B_n	width of nozzle exit area in open jet facilities, width of the test section in closed test section facilities, expressed in metres	(m)
B_v	maximum width of the ventilator in the fire open position, expressed in metres above the upper surface of the settling chamber	(m)
C_v	coefficient of discharge, dimensionless	
C_{v0}	coefficient of discharge without side wind influence, dimensionless	
C_{vw}	coefficient of discharge with side wind influence, dimensionless	
H_n	height of nozzle exit area in open jet facilities, height of the test section in closed test section facilities, expressed in metres	(m)
H_v	maximum height of the ventilator in the fire open position above the upper surface of the settling chamber, expressed in metres	(m)
L	length of the open hole of the settling chamber, expressed in metres	(m)
$\dot{m}_{ing}$	mass flow rate entering the settling chamber, expressed in kilograms per second	(kg/s)
p_{amb}	ambient pressure, expressed in pascals	(Pa)

p_d	wind stagnation pressure, expressed in pascals	(Pa)
p_{int}	internal static pressure, expressed in pascals	(Pa)
$p_{int, vo}$	internal static pressure without side wind, expressed in pascals	(Pa)
$p_{int, vw}$	internal static pressure with side wind, expressed in pascals	(Pa)
T	temperature, expressed in degrees C	(°C)
ΔT	temperature difference, expressed in Kelvin	(K)
V_∞	side wind velocity, expressed in metres per second	(m/s)
$V_{m, sc}$	mean velocity of the settling chamber, expressed in metres per second	(m/s)
V_n	mean nozzle velocity, expressed in metres per second	(m/s)
V_{sc}	local velocities in plane above settling chamber, see Figure B6, expressed in metres per second	(m/s)
W_s	snow load, expressed in pascals	(Pa)
W_w	wind load, expressed in pascals	(Pa)
W_{wd}	design wind load, expressed in pascals	(Pa)
α	opening angle of the ventilator, expressed in degrees	
$ß$	angle of attack, expressed in degrees	
$ß_{crit}$	incidence angle at which the smallest value of C_{vw} obtained with side wind, occurs, expressed in degrees	
θ	angle of installation of ventilators on a roof, expressed in degrees	
Δp	pressure difference, expressed in pascals	(Pa)
Δp_{v0}	reference pressure difference between the static pressure in the settling chamber and the ambient pressure without side wind, expressed in pascals	(Pa)
Δp_{vw}	reference pressure difference between the static pressure in the settling chamber and the ambient pressure with side wind, expressed in pascals	(Pa)
Δp_{int}	pressure difference between the static pressure in the settling chamber and the ambient pressure, expressed in pascals	(Pa)
ρ_{air}	density of air, expressed in kilograms per cubic metre	(kg/m^3)

4 Design requirements

4.1 Initiation device

4.1.1 General

Each ventilator shall be fitted with one or more of the following automatic initiation devices:

a) a thermal initiation device;

b) an initiation device activated by an electrical signal from a remote source, e.g. a smoke and heat detector system, the interruption of electrical supply or a manually actuated "fire override" switch;

c) a pneumatic initiation device, e. g. a pneumatic signal or a loss of compressed air;

d) an initiation device able to respond to other types of release signal.

The response behaviour of thermal automatic initiation devices shall comply with the requirements of EN 12259-1. Smoke detectors shall comply with the requirements of EN 54-7. In addition, a manually operated initiation device may be fitted.

In some specific design cases where it is suitable that the ventilator shall only be manually initiated, the ventilator may be installed without an automatic initiation device.

4.1.2 Thermal initiation device

Any thermal initiation device shall be within the ventilator and shall be exposed to the hot gas entering the closed ventilator.

4.2 Opening mechanism

4.2.1 General

The ventilator shall be provided with an opening mechanism with energy within the ventilator, e.g. gas containers, spring systems, electrical power supply and/or with an external energy source. For the external links the manufacturer shall specify the operating requirements for the initiation device and the opening mechanism, e.g. voltage, energy.

NOTE The availability of the energy source should be ensured.

4.2.2 Integral gas containers

Any gas container forming an integral part of the ventilator shall be equipped with a pressure release device to prevent an explosion if the container overheats.

4.3 Opening of ventilator

For on site testing purposes there are two types of ventilators:

Type A which are able to be opened into their fire open position;

Type B which are able to be opened into their fire open position and closed remotely.

4.4 Size of the geometric area

The size and form of the geometric area shall be such that it will comply to the limitation set by the test apparatus available for the heat exposure test.

The side length shall not exceed 2,5 m and the aspect ratio of the geometric area shall not exceed 5:1 when using the simple assessment procedure to determine the aerodynamic free area, see B.1.

NOTE At present, maximum dimensions of the test apparatus for the heat exposure test are in the range of 3 m.

For ventilators larger than the largest ventilator tested according to annex G an assessment of the heat exposure effect shall be made by the testing station, to ensure that the performance is not negatively affected.

5 General testing procedures

For type approval testing, tests shall be carried out in the sequence specified in A.1.

For each test, a test report shall be prepared in accordance with A.2.

If detail changes are made to the product range which has been tested then some of the tests mentioned may be omitted, when type testing the new product in the range.

6 Aerodynamic free area of the ventilator

The aerodynamic free area of the ventilator shall be determined in accordance with annex B.

7 Performance requirements and classification

7.1 Reliability

7.1.1 Reliability classification

The ventilator shall be classified as one of the following:

Re A

Re 50

Re 1000

The designation A, 50, 1000 will represent the number of openings into the fire open position and closing under no applied load in accordance with annex C.

7.1.2 Reliability performance

The ventilator shall open, reach its fire open position not more than 60 s after actuation without damage and remain in position without an external energy supply (until reset).

7.1.3 Dual purpose ventilator

If the ventilator is a dual purpose ventilator, it shall open to its normal comfort position when tested under no load 10 000 times in accordance with annex C prior to testing the same ventilator under 7.1.1 and 7.1.2.

7.2 Opening under load

7.2.1 Loads

7.2.1.1 Snow load classification

The ventilator shall be classified as one of the following:

SL 0

SL 125

SL 250

SL 500

SL 1000

SL A

The designations 0, 125, 250, 500, 1000, and A represent the test snow load in Pa applied when the ventilator is tested in accordance with annex D.

NOTE 1 A ventilator classified SLO can be installed in accordance with the manufacturer's instructions with a minimum angle of installation > 45° (combining roof pitch and vent pitch, see Figure 1 except where the snow will be prevented from slipping from the ventilator, e.g. by wind deflectors.

NOTE 2 Except for SLO for ventilators fitted with deflectors, the snow load classification should not be less than SL = 2000 d where d is the depth of snow, in metres, which can be contained within the confines of the deflectors.

7.2.1.2 Load due to side wind simulation

To simulate the side wind influence the ventilator shall be subjected to the most unfavourable wind direction to a side wind of 10 m/s velocity when tested in accordance with annex D.

7.2.2 Performance under load

The ventilator shall open, reach its fire open position not more than 60 s after actuation and remain in position without an external energy supply (until reset), when tested under the snow load appropriate to its classification and under the specified side wind in accordance with annex D.

For ventilators fitted with wind deflectors, the deflectors shall be at least 80 mm from the nearest part of the ventilator and they shall not be fitted in such a way to encourage snow or ice to collect to the detriment of the operation of the ventilator.

NOTE It is recommended that louver-type ventilators are classified not less than SL500 when used in sub zero conditions.

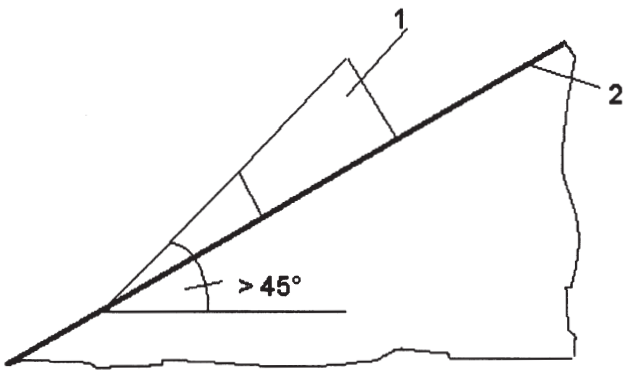

Key
1 Ventilator
2 Roof

Figure 1 — Combined roof pitch and vent pitch angle > 45°

7.3 Low ambient temperature

7.3.1 Classification

The ventilator shall be classified as one of the following:

T(-25)

T(-15)

T(-05)

T(00)

TA

The designations 25, 15, 05 and A represent the number of °C below zero at which the ventilator is tested in accordance with annex E. T(00) ventilators are only regarded as suitable for use in construction works where the temperature is above 0 °C.

7.3.2 Performance at low temperature

When tested in accordance with annex E the opening mechanism of a classified ventilator (see 7.3.1) shall work corresponding to the load versus stroke correlation as the same opening mechanism does when built in and tested under ambient temperature, using not more than 60 s time to reach the stroke which corresponds to the fire open position of the ventilator. No such test is necessary for ventilators classified T(00).

7.4 Wind load

7.4.1 Wind load classification

The ventilator shall be classified as one of the following:

WL 1500

WL 3000

WL A

The designations 1500, 3000 and A represent the test wind suction load in Pa applied when the ventilator is tested in accordance with annex F.

7.4.2 Performance under wind load

The ventilator shall not open under the wind load appropriate to its classification, and shall not suffer permanent deformation when tested in accordance with annex F and following this test shall open into the fire open position within 60 s of actuation.

7.4.3 Resistance to wind-induced vibration

If wind deflectors form an integral part of the ventilator, their natural frequency of vibration shall be higher than 10 Hz with a logarithmic decrement of damping greater than 0,1 when tested in accordance with F.4.2.

7.5 Resistance to heat

7.5.1 Classification

The ventilator shall be classified as one of the following:

B 300

B 600

B A

The designations 300, 600 and A represent the temperature (in °C) at which the ventilator is tested in accordance with annex G.

7.5.2 Performance

7.5.2.1 The reaction to fire of the materials of the ventilator shall be tested and classified in accordance with EN 13501-1, except for those deemed to satisfy class A1 without the need for testing[1].

7.5.2.2 The throat area shall not be reduced by more than 10 % of the initial throat area when the ventilator is tested in accordance with annex G.

8 Evaluation of conformity

8.1 General

The compliance of natural smoke and heat ventilators with the requirements of this standard shall be demonstrated by:

— type testing;

— factory production control by the manufacturer.

---

[1] See Commission Decision 96/603/EEC as amended.

8.2 Type testing

Type testing, which shall be performed on first application of this standard, shall demonstrate conformity with clauses 4, 6, and 7, the tests being carried out in the order of clause 5.

Tests previously performed in accordance with the provisions of this European Standard (same product, same characteristic(s), test method, sampling procedure, system of attestation of conformity, etc.) may be taken into account.

In addition, initial type testing shall be performed at the beginning of the production of a new product type or at the beginning of a new method of production (where these may affect the stated properties).

8.3 Factory production control (FPC)

The manufacturer shall establish, document and maintain an FPC system to ensure that the products placed on the market conform with the stated performance characteristic. The FPC system shall consist of procedures, regular inspections and tests and/or assessments and the use of the results to control raw and other incoming materials or components, equipment, the production process and the product, and shall be sufficiently detailed to ensure that the conformity of the product is apparent.

An FPC system conforming with the requirements of EN ISO 9001, and made specific to the requirements of this standard, shall be considered to satisfy the above requirements.

The results of inspections, tests or assessments requiring action shall be recorded, as shall any action taken. The action to be taken when control values or criteria are not met shall be recorded.

9 Marking

The ventilator shall be marked with the following:

a) the name or trade mark of the supplier and/or manufacturer; and

b) the type and model; and

c) the year of manufacture; and

d) technical characteristics of the external energy supply (e.g. power, current, voltage, pressure); if integral gas containers are used they shall be marked with at least the following: mass and type of gas, fill ratio, nominal temperature; and

e) temperature of the thermal initiation device (if fitted); and

f) the aerodynamic free area (see B 2.5) in square metres; and

g) the classes for wind load, snow-load, low ambient temperature, reliability and heat exposure temperature; and

h) the number and year of this European Standard, i.e. EN 12101-2:2003 ;

i) Suitable for wall mounting with wind sensitive control system only (if tested to B.2.4.2).

10 Installation and maintenance information

10.1 Installation information

The supplier shall provide appropriate installation information, which shall include the following:

— fixing information;

— connection information to external services (e.g. electric and pneumatic installation).

10.2 Maintenance information

The supplier shall provide appropriate maintenance information for the ventilator, which shall include the following:

— inspection and maintenance procedure;

— recommended frequency of operational checks;

— recommended checks for the effects of corrosion.

Annex A
(normative)

General testing procedures

A.1 Test sequence

For type approval testing carry out the tests in the following sequence:

— annex B, determination of the aerodynamic free area;

— annex C, reliability test;

— annex D, opening test under load;

— annex E, low ambient temperature test;

— annex F, wind load test;

— annex G, heat exposure test.

The same ventilator may be used for the reliability, wind load and opening under load tests.

A.2 Test report

A test report shall be prepared including the following:

— name or trade mark and address of the supplier and/or manufacturer; and

— name of the product (type and model); and

— date/s of the test/s; and

— name/s and address/es of the testing organisation; and

— description of the test specimen; and

— reference to the test method/s; and

— conditions of test/s; and

— observations during the test/s; and

— test results; and

— classifications achieved, if relevant.

Annex B
(normative)

Determination of the aerodynamic free area

B.1 Simple assessment procedure

For the types of ventilator shown in Figure B.1 and which are in accordance with 4.4, the discharge coefficient may be taken as C_v = 0,4 for installation situations with an upstand height of at least 300 mm and for the specified opening angle. An inflow of air into the fire room instead of a discharge of smoke from the fire room shall be avoided. Small opening angles and/or other installation situations, e.g. see Figure B.2, may lead to negative discharge coefficients.

B.2 Experimental procedure

B.2.1 General

Unless a simple assessment procedure of B.1 is used, determine A_a experimentally either directly, or indirectly from results on ventilators of different size or scaled down models.

B.2.2 Test apparatus

Use a test apparatus with an open jet or a closed test section facility as shown in Figure B.3.

This consists of a settling chamber onto which the ventilator can be mounted in accordance with Figure B.4 so that the mass flow through the ventilator can be determined, and a side wind simulator by means of which the ventilator may be subjected to a side wind. The flow in the settling chamber approaching the smoke ventilator shall be steady state and uniform.

This will be achieved if the ratio of the geometric area of the ventilator to the horizontal cross sectional area of the settling chamber $A_v/A_{sc} \leq 0,15$ and the velocity (V_{sc}) distribution measured in the open hole (without ventilator) at the points specified in Figure B.6 varies by only ± 10 % of the mean velocity $V_{m,\,sc}$ of the settling chamber.

To obtain a uniform side wind condition, when the ventilator is subjected to side wind, the tests shall be carried out in side wind simulation facilities. The following conditions shall be satisfied:

open jet facilities	closed test section facilities
– $A_{pr}/A_n \leq 0,3$	– $A_{pr}/A_n \leq 0,08$
– $H_n/H_v \geq 1,3$	– $H_n/H_v \geq 3$
– $B_n/B_v \geq 1,5$	– $B_n/B_v \geq 2$

- none of the velocities measured at the points indicated in Figure B.5 in the entrance area to the test section - both, for open jet and closed test section facilities - varies by more than ± 10 % of the mean nozzle velocity V_n .

B.2.3 Test specimen

Carry out tests on full size smoke ventilators as supplied by the manufacturer and/or supplier, or on accurately scaled-down models. For testing scaled down models flow similarity shall be established. This is always achieved if the Reynolds Numbers of the scaled down model and the full scale ventilator are identical. The Reynolds Number similarity usually requires model scales of 1:6 or larger. Smaller scales (down to 1/10) may be used if justification is given for the flow similarity.

When testing scaled-down models, all features of the ventilators in contact with the airflow (e.g. opening elements or details of flaps) shall be included and have to satisfy the similarity requirement.

NOTE Experience has shown that it is difficult to model ridge vents and louver type ventilators.

It is not considered necessary to test all sizes of a range of similar ventilators, provided tests are carried out on a representative selection of sizes. For testing ventilators differing in dimensions but belonging to the same range, A_a may be calculated for intermediate sizes. The method of calculation shall be mentioned in the test report.

For ventilators designed as part of a continuous roof-light the test specimen shall be mounted on the rig with parts of the roof-lights. Those parts shall have a minimum width of half the external dimension of the ventilator parallel to the line of the roof-light.

B.2.4 Test procedure

B.2.4.1 Roof mounted ventilators

Quantify the outside ambient static pressure with and without wind using the following procedure. Make sure the settling chamber is airproof. Fit into the exit opening of the settling chamber and flush with the exterior of the settling chamber ceiling a thin plate with evenly spaced holes (diameter 5 cm) in order to get a geometric porosity (hole area/exit area of settling chamber) equal to (5 ± 1) %. Measure the static pressure in the settling chamber without wind $p_{int,v0}$ and with wind $p_{int,vw}$ according to the side wind conditions specified below with reference to the atmospheric pressure $p_{ambient1}$.

$$p_{int,\,v0} = p_{ambient\,1} + \Delta p_{v0}$$

$$p_{int,\,vw} = p_{ambient\,1} + \Delta p_{vw}$$

Record the Δp_{v0} and Δp_{vw} values, remove the drilled plate and fit the ventilator on the settling chamber. Carry out the tests with and without wind.

For the no-side wind case set the full-scale ventilator onto the settling chamber to get the internal static pressure

$$p_{int} = p_{ambient\,2} + \Delta p_{v0} + \Delta p_{int}$$

with Δp_{int} over the range Δp_{int} = 3 Pa to 12 Pa with an accuracy of at least ± 5% and $p_{ambient\,2}$ = atmospheric pressure at the time of the measurement.

Measure the ambient atmospheric pressure and temperature, the static pressure of the air in the settling chamber and the volume flow entering the settling chamber. Determine for each value of Δp_{int} the corresponding mass flow $\dot{m}_{ing}$.

Take not less than six readings of Δp_{int} and $\dot{m}_{ing}$ for testing without side wind.

When testing scaled-down models at an increased pressure difference Δp_{int}, due to the Reynolds similarity requirement, the accuracy required of measurement shall be ± 3 % of the reading. The required accuracy of the mass flow

measurement is ± 2,5 % of the reading. Measure the temperature and the pressure of the ambient air with an accuracy of ± 0,5 K and ± 0,5 %, respectively.

To carry out tests on full scale ventilators with a side wind speed of 10 m/s upstream of the test section, measure the atmospheric pressure and temperature of the air in the wind flow upstream of the test section. Set the ventilator onto the settling chamber to get the internal static pressure

$$p_{int} = p_{ambient\ 3} + \Delta p_{vw} + \Delta p_{int}$$

with Δp_{int} over the range of Δp_{int} = 0,005 p_d to 0,15 p_d with p_d calculated using the equation

$$p_d = \frac{1}{2} \rho_{air} V_n^2$$

and $p_{ambient\ 3}$ = atmospheric pressure at the time of the measurement.

Measure $\dot{m}_{ing}$, take no less than six readings of Δp_{int} and $\dot{m}_{ing}$ for testing with side wind.

Plot a graph of C_{vw} versus $\Delta p_{int}/p_d$ and determine the discharge coefficient with side wind C_{vw} from the regression line of the readings at $\Delta p_{int}/p_d$ = 0,082 for the least favourable angle of incidence β_{crit}.

To determine $ß_{crit}$, measure the C_{vw}-value for various angles ß. $ß_{crit}$ is obtained when measurements for angles ß = $ß_{crit}$ ± 5° will lead to higher C_{vw}-values than determined for $ß_{crit}$.

Use the same procedure when measuring the discharge coefficient with side wind for scaled-down models. However, to ensure the similarity of the flow around the ventilator for full size and model, Δp_{int} has to be increased, see above. This leads to an increase in the wind stagnation pressure according to $\Delta p_{int}/p_d$ = 0,082 and thus to an increase in nozzle exit velocity as compared to full size testing. To avoid compressibility effects, do not test at a side wind velocity greater than 100 m/s.

The usually fluctuating measurement signals shall be averaged over a time period long enough for the pressure and air volume flow values to be respectively in the range of ± 2,5 % and ± 5 % for several similar successive experiments. The averaging technique shall be given in the test report.

B.2.4.2 Wall mounted ventilators

For wall mounted ventilators follow the test procedure of B.2.4.1 in the «without wind» condition only.

B.2.5 Evaluation of test results

Calculate the discharge coefficient using the equation :

$$C_v = \frac{\dot{m}_{ing}}{A_v \cdot \sqrt{2 \cdot \rho_{air} \cdot \Delta p_{int}}}$$

From the C_v-values thus determined, calculate the mean discharge coefficients C_{v0} (without side wind) and C_{vw} (with side wind). Calculate the aerodynamic free area using the lower value of the C_{v0}- and C_{vw}-values rounded to two digits:

$$A_a = A_v \cdot C_v$$

Wall mounted ventilators have a value C_{v0} only.

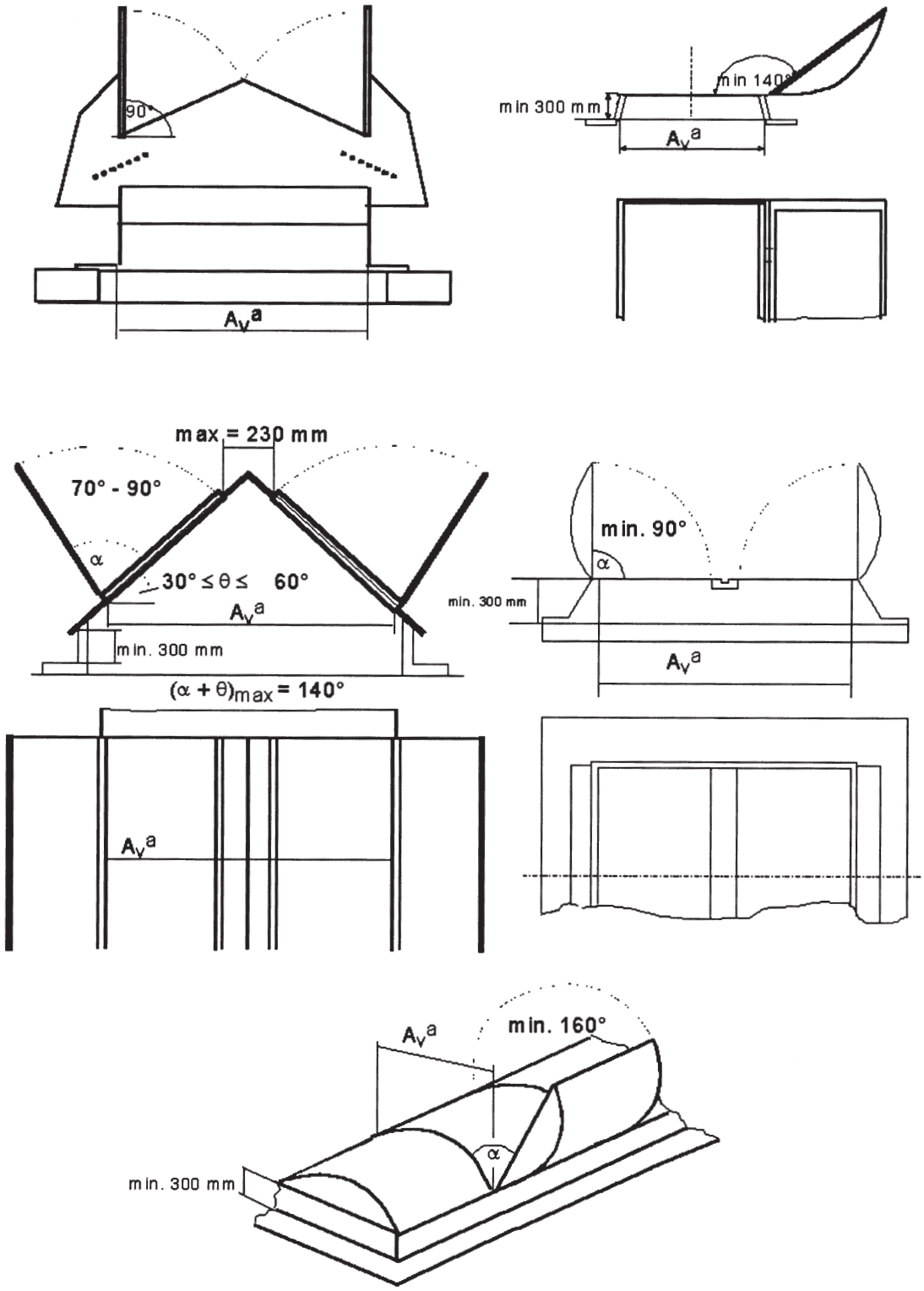

Key
[a] Length x width

Figure B.1 — Types of ventilator for the simple assessment procedure

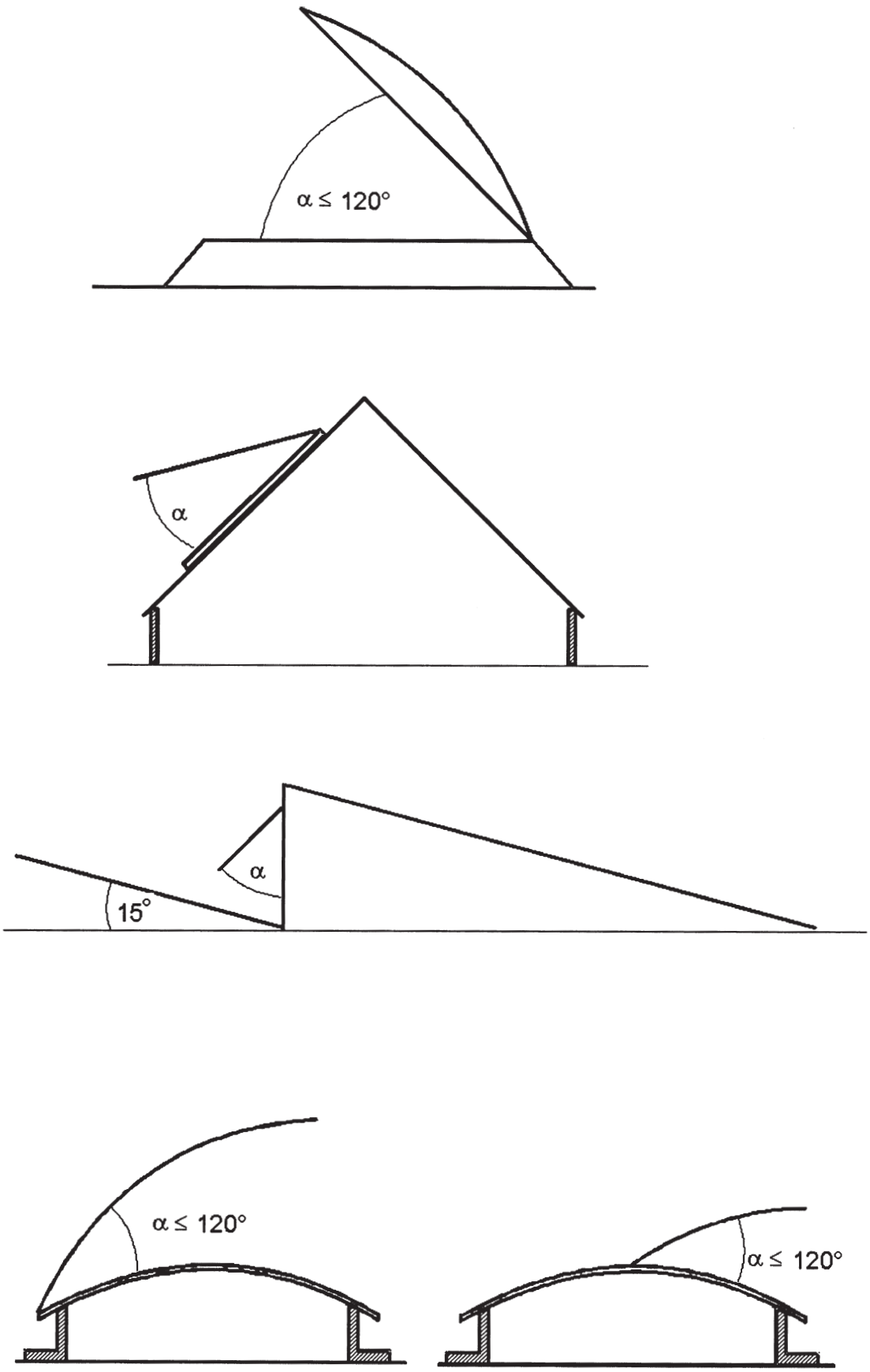

Figure B.2 — Examples of types of ventilator probably leading to negative discharge

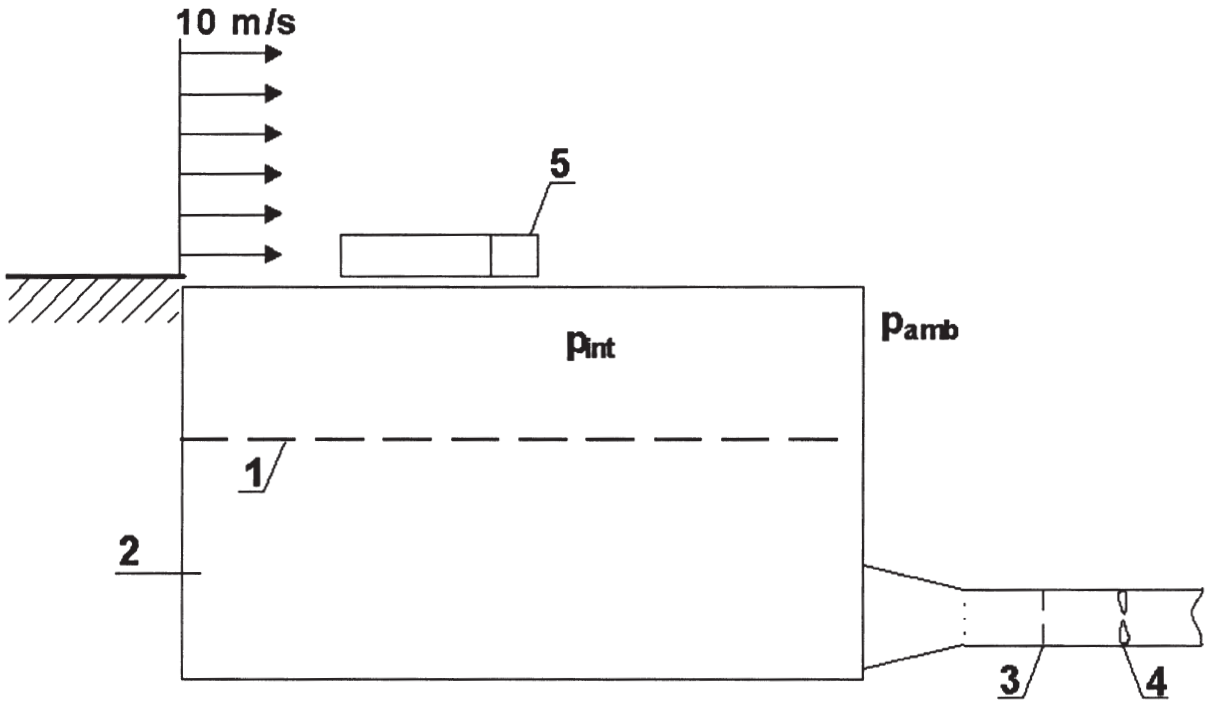

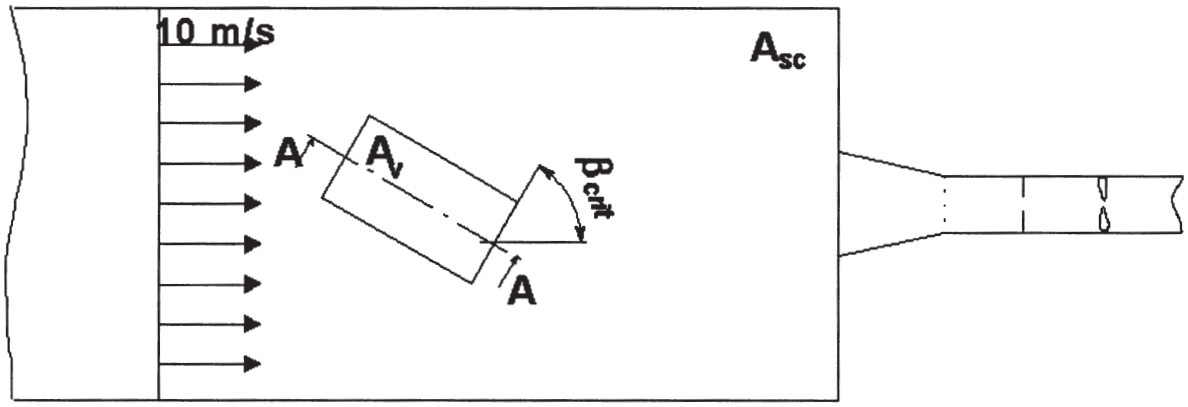

Key
1 Screen
2 Settling chamber
3 Volume flow measurement
4 Fan
5 Smoke vent

Figure B.3— Schematic drawing of test set up for the determination of Av

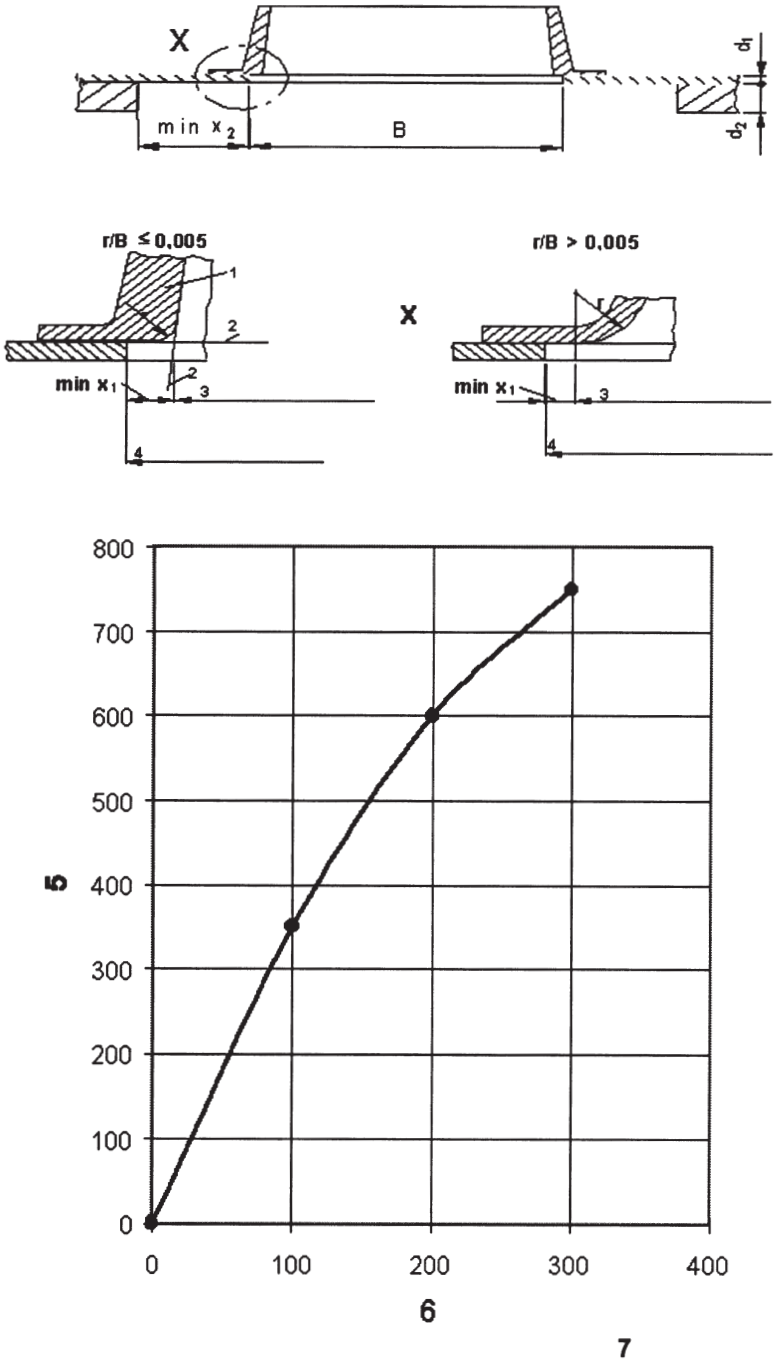

Key

1 Ventilator
2 Tangent
3 Geometric dimension of ventilator
4 Ceiling dimension
5 Distance measure x_1 min and x_2 min, in mm
6 Ceiling thickness d_1 and d_2, in mm
7 Diagram to determine the distance for mounting the ventilator on the ceiling of the settling chamber

Figure B.4 — Data for the mounting of the ventilator onto the settling chamber

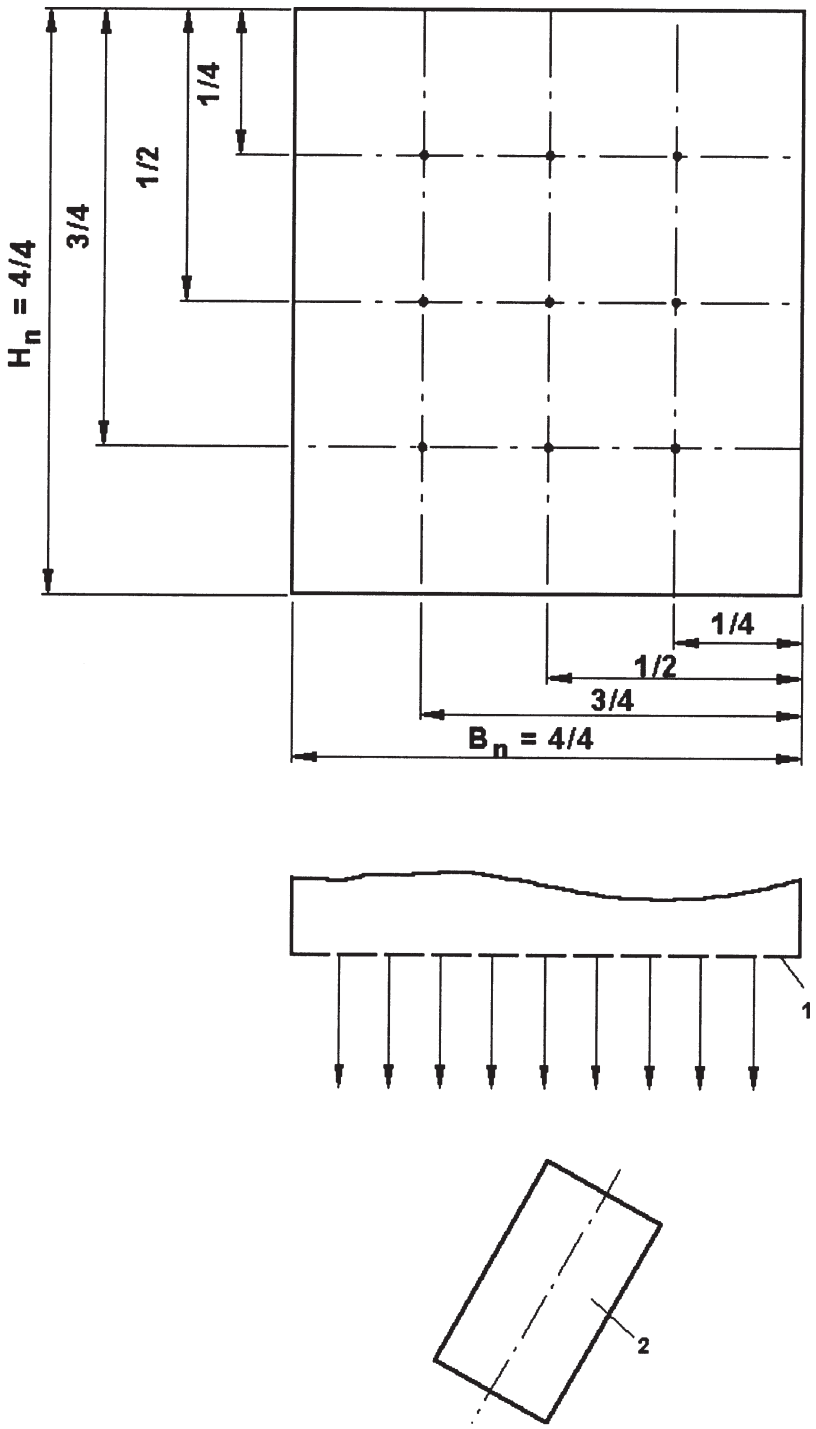

Key
1 Plane of measurement
2 Smoke vent

Figure B.5 — Measuring positions for the side wind velocity

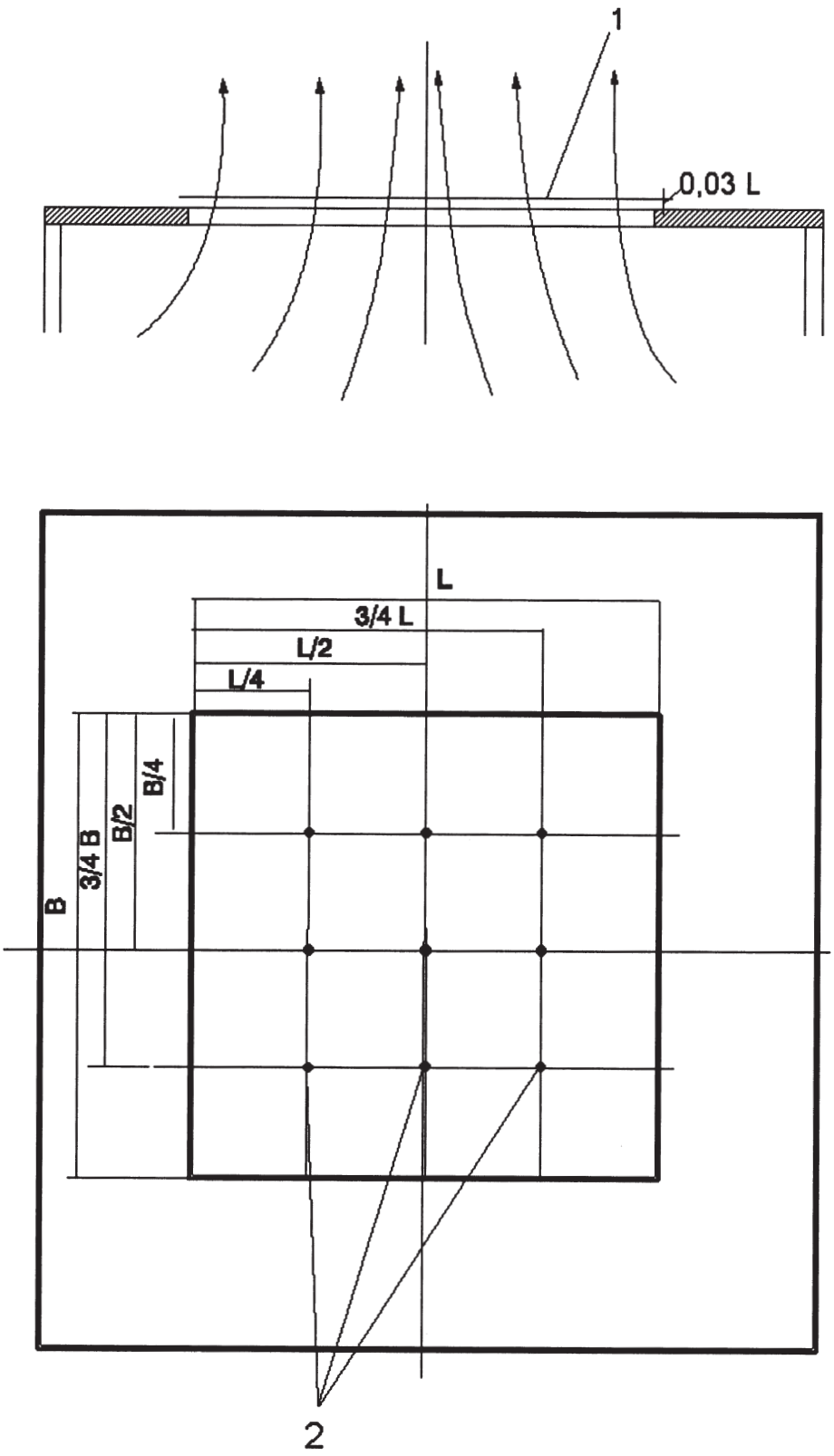

Key
1 Plane of measurement
2 Measuring points to determine V_{sc}

Figure B.6 — Measuring positions for the flow velocity in the exit opening of the settling chamber

Annex C
(normative)

Test method for reliability

C.1 Objective of test

The objective of this test is to determine the ability of the installed ventilator to open and close for the number of cycles specified in 7.1.1 and 7.1.3.

C.2 Test apparatus

The ventilator shall be mounted onto a test rig having an energy source to activate the opening and closing mechanism, and a device to automatically count the number of cycles.

C.3 Test specimen

A test on the ventilator with the largest geometric area and a test on the ventilator with the largest side length (both achieving the objective of the test) may be considered representative of all ventilators in a particular range (where a ventilator has both the largest area and the largest side length, only one test is necessary).

C.4 Test procedure

During the test, do not maintain, repair or replace any part involved in the opening or closing of the ventilator. Mount the specimen ventilator securely onto the test rig at the angle within the range of angles specified by the supplier and/or manufacturer which imposes the highest stresses on the ventilator during use. Do not apply any external load to the ventilator.

Using the ventilator's energy source, or using an external energy source to simulate the effect of the ventilator's energy source, open the ventilator to the fire open position through the number of cycles according to the reliability classification in 7.1.1. Following this, open the ventilator to the fire open position through three cycles using the ventilator's energy source. The fire open position shall be reached in no more than 60 s.

If the ventilator is designed to be remotely opened and closed for on-site testing purposes, the ventilator shall be closed in the test remotely using the ventilator's closing mechanism during each cycle.

If the ventilator is a dual purpose ventilator carry out 10 000 cycles to the normal comfort ventilation position prior to the above test.

If more than one energy source may be used, the most critical energy source shall be chosen for the test.

Report any maintenance, repair or replacement of any part not involved in the opening or closing. Such maintenance, repair or replacement shall not constitute a failure of the test.

Annex D
(normative)

Test method for opening under load

D.1 Objective of test

The objective of this test is to establish the ability of the ventilator to open and remain open against an applied wind or snowload.

D.2 Test apparatus

Use a test rig onto which the ventilator can be mounted and subjected to a test snow load applied by one of the following methods:

— plates (one or more per louver blade/flap when testing louver-type ventilators);

— bags containing up to 5 kg each of solid particles or liquid;

— or, for ventilators with pivoting flaps, both the test snow load and the wind load may be replaced by equivalent torque leading to the same torque/opening angle relation.

Spread the loads over the whole of the external surface of the individual elements of the opening parts of the ventilator, to produce a uniformly distributed load equal to the appropriate load specified in 7.2.1.

For ventilators in which, under practical conditions involving wind, flaps are opened into the wind flow, carry out the test with a side wind with a distribution of side wind speed (10 ± 1) m/s taken over the projection area of the ventilator in addition to the test snow load, in the direction critical for opening, i.e. leading to the largest wind resistance against opening.

D.3 Test specimen

A test on the ventilator with the largest geometric area and a test on the ventilator with the largest side length (both achieving the objective of the test) may be considered representative of all ventilators in a particular range (where a ventilator has both the largest area and the largest side length, only one test is necessary).

D.4 Test procedure

Mount the ventilator onto the test rig at the supplier's minimum recommended installation angle. Apply the appropriate load. Actuate the ventilator and check that it opens, reaches the fire open position within 60 s and remains in position without an external energy supply, without damage, using the primary energy source. Reset the ventilator and repeat the actuation test a further two times, applying the same opening requirement.

Annex E
(normative)

Test method for low ambient temperature

E.1 Objective of test

The objective of this test is to establish the ability of the opening mechanism of the ventilator to operate at low ambient temperature.

E.2 Test apparatus

Use the test apparatus described in D.2. The test apparatus shall be constructed to simulate the forces due to side wind, snow and the mass, of the ventilator parts affected, e.g. the mass of the flap upon the opening mechanism.

E.3 Test specimen

A test on the most critical ventilator tested according to annex D may be considered representative of all ventilators in a particular range, for the purpose of the ambient temperature test.

E.4 Test procedure

A simplified test or a test with a complete ventilator shall be conducted.

E.4.1 Simplified test method

Mount the ventilator onto a test rig at the supplier's minimum recommended installation angle according to annex D. The temperature shall be (25 ± 10) °C. Actuate the ventilator and measure the necessary force on the opening mechanism and the stroke of the opening mechanism. Measure the force on the opening mechanism with an accuracy of not more than 3 % of the maximum force. Measure the stroke of the opening mechanism with an accuracy of not more than 3 % of the maximum stroke. The temperatures to be measured in this test shall be measured with an accuracy of at least ± 1,5 °C. The time to be measured in this test shall be measured with an accuracy of at least ± 0,5 s.

Check for the correct relationship between the load and stroke, for the correct function of the opening mechanism and check that the evaluated correlation between load over stroke is not more than 80 % of the correlation between maximum allowed load over stroke given by the manufacturer of the opening mechanism.

Reduce the temperature of the temperature sensitive parts of the opening mechanism (i. e. springs, energy source, all levers pushing or pulling the ventilator flaps, but not including the flaps) and the internal ventilator energy source to the appropriate value specified in 7.3.1.

Repeat this test three times and check for the correct relationship between the load and stroke of the opening mechanism and for the time which is necessary for the opening mechanism to reach the stroke position, which corresponds to the fire open position of the ventilator.

If several energy sources are used the most critical energy source shall be chosen for the test.

E.4.2 Test with complete ventilator

Mount the ventilator in a climatic chamber at the supplier's minimum recommended installation angle. Reduce the temperature in the climatic chamber to the appropriate value specified in 7.3.1. It shall be ensured that the deviation of the sample temperature during the performance of the test is not greater than

$^{+2}_{-5}$ °C of the appropriate value specified in 7.3.1. Open the ventilator into its fire open position using the ventilator's proposed energy source. Repeat this test three times.

Annex F
(normative)

Test methods for wind load

F.1 Objective of test

The objectives of this test are to establish the integrity of the ventilator under suction loads imposed by the wind and that the ventilator remains closed and that it will open into its fire open position after being subjected to the suction load.

F.2 Test apparatus

Use a test rig onto which the ventilator can be mounted and subjected to a uniformly distributed load applied by one of the following methods:

a) air pressure;

b) air pressure bags;

c) bags containing not more than 10 kg of solid particles or liquids.

F.3 Test specimen

A test on the ventilator with the largest geometric area and a test on the ventilator with the largest side length (both achieving the objective of the test) may be considered representative of all ventilators in a particular range (where a ventilator has both the largest area and the largest side length, only one test is necessary).

F.4 Test procedure

F.4.1 Wind load

Mount the ventilator on the test rig in accordance with the supplier's and/or manufacturer's recommendations. Apply a load using one of the methods given in F.2, increasing the load from zero to the appropriate upper limit specified in 7.4, and maintain this load for (10 ± 1) min. Remove the load.

On completion of the test, the ventilator, in its normal operating position, shall be opened without the applied load and remain in position without an external energy supply.

F.4.2 Vibration

The vibrational behaviour of wind deflectors concerning wind induced vibration, shall be characterized by the structure's lowest natural frequency and the logarithmic decrement of damping of free oscillation. The natural frequency and the logarithmic decrement of damping can be determined e.g. with an accelerometer fixed to the structural element.

The obtained acceleration versus time trace shall be evaluated to give the natural frequency and logarithmic decrement.

Annex G
(normative)

Test method for heat exposure

G.1 Objective of the test

The objective of this test is to establish the ability of the installed ventilator to open under exposure to heat and to remain in the fire open position with not more than 10 % reduction of the throat area.

G.2 Test apparatus

G.2.1 Test furnace

Use a furnace to which the ventilator is connected directly.

The furnace may be heated by any convenient means. The test apparatus shall not allow the combustion zone of flames to contact the ventilator.

Suitable test furnaces are specified in EN 1363-1.

G.2.2 Temperature measurement

Measure the furnace temperature using four thermocouples located in accordance with Figure G.1. The thermocouple in the centre of the plane of measurement is used for information only. The thermocouples shall have measuring junctions of nickel chromium/nickel aluminium (type K) wire as defined in EN 60584-1 contained within mineral insulation in a heat resisting alloy sheath of diameter (3 ± 0,2) mm, the hot junctions being electrically insulated from the sheath. The thermocouple hot junction shall project at least 25 mm from any given support tube if used. An example of a thermocouple is given in Figure G.2

All dimensions in millimetres

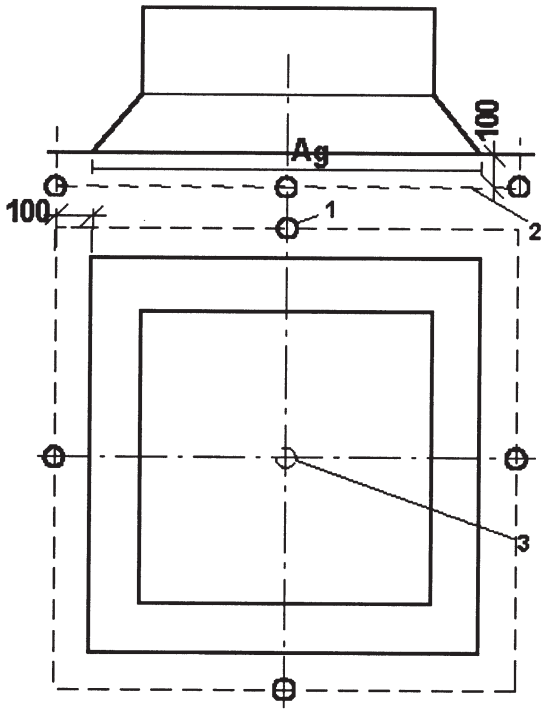

Key
1 Thermocouple
2 Plane of measurement
3 For information only

Figure G.1 — Position of thermocouples

Dimensions in millimetres

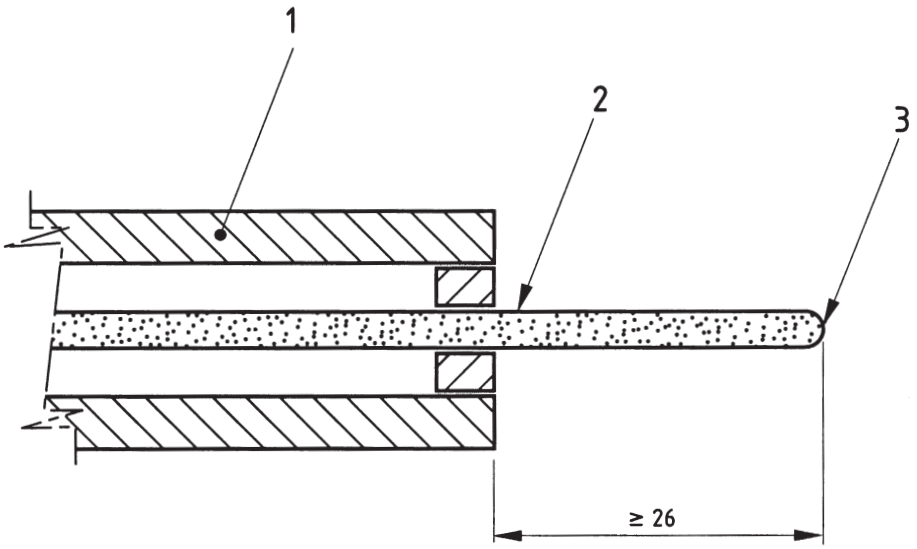

Key

1 Heat resisting alloy steel tube

2 (3 ± 0,2) mm diameter sheathed thermocouple

3 Hot junction

Figure G.2 — Example of thermocouple assembly in support tube

G.2.3 Ventilator mount

Use a mount constructed from materials which do not distort when subjected to the test temperature, with an opening area equal in size to the geometric area of the ventilator, and with the mount surface pitched at the minimum recommended installation angle (minimum pitch angle) for the ventilator.

G.3 Test specimen

A test on the widest and a test on the longest ventilator (both achieving the objective of the test) may be considered representative of all ventilators in a particular range (where a ventilator is the widest and the longest, only one test is necessary). The ventilator with the most critical material and most critical parts shall be selected for the test.

For smoke ventilators designed as part of a continuous rooflight mount the test specimen with parts of the rooflight having a minimum width of 250 mm on either side of the ventilator parallel to the line of the rooflight.

G.4 Test procedure

Fix the ventilator securely to the furnace mounting and ensure that the mounting opening lines up with the geometric area of the ventilator.

Increase the furnace temperature following a gradient between limits defined by 0,9 K/s and 1,1 K/s to reach a mean temperature in the plane of measurement of $(300\ ^{+60}_{0})$ °C within 5 min, $(600\ ^{+120}_{0})$ °C within 10 min or (A

$^{+0,2A}_{0}$) °C within A/60 min (all from the start of the test) as appropriate (see 7.5.1). This temperature shall be maintained for the remaining test time. The total test time shall be (30 ± 1) min.

The maximum temperature difference between any two of the four main thermocouples shall not exceed 1/3 of the mean temperature of the four thermocouples, after the classification temperature has been achieved. For the first 5 min the ventilator shall remain closed and show no signs of degradation. The ventilator shall be initiated manually into its fire open position 5 min after the furnace temperature starts to rise.

If the ventilator is fitted with a thermal device disconnect the thermal device from the opening mechanism which then will be operated manually.

For a period of 5 min after actuating the ventilator (between 10 and 15 min after starting the test), the tolerances applying to the furnace temperature are enlarged to ± 100 ° C.

Allow the ventilator to cool and check that the throat area has not been reduced by more than 10 %.

The test result is valid for all installation angles equal to or larger than the test installation angle.

Annex ZA
(informative)

Clauses of this European Standard addressing essential requirements or other provisions of EU Directives

ZA.1 Scope and relevant clauses

This annex has the same scope as Clause 1 of this standard.

This European Standard has been prepared under the Mandate given to CEN by the European Commission and the European Free Trade Association.

The clauses of this European Standard shown this annex meet the requirements of the Mandate M/109 given under the EU Construction Products Directive (89/106).

Compliance with these clauses confers the presumption of fitness of the construction products covered by this European Standard for their intended use.

WARNING: Other requirements and EU directives, not affecting the fitness for intended use may be applicable to a construction product falling within the scope of this standard.

NOTE In addition to any specific clauses relating to dangerous substances contained in this standard, there may be other requirements applicable to the products falling within its scope (e.g. transposed European legislation and national laws, regulations and administrative provisions). In order to meet the provisions of the EU Construction Products Directive, these requirements need also to be complied with, when and where they apply. An informative database of European and national provisions on dangerous substances is available at the Construction web site on EUROPA (CREATE, accessed through http://europa.eu.int/comm/enterprise/construction/internal/hygiene.htm).

Construction Products: Natural smoke and heat exhaust ventilators

Intended use(s): Natural smoke and heat exhaust ventilators for smoke and heat control in construction works

Table ZA.1 — Relevant clauses

Essential Characteristic	Requirement Clause in this European Standard	Mandated levels and/or classes	Notes:
nominal activation conditions/ sensitivity	4.1 4.2		
response delay (response time)	7.1.2		s
operational reliability	7.1 7.4		
effectiveness of smoke/hot gas extraction	6		
aerodynamic free area	6.		m^2
performance parameters under fire conditions	7.5		
fire resistance – mechanical stability	7.5		
ability to open under environmental conditions	7.2 7.3		
reaction to fire	7.5.2.1		

ZA.2 Procedure(s) for the attestation of conformity of products

Natural smoke and heat exhaust ventilators for the intended use listed shall follow the system of attestation of conformity shown in Table ZA.2.

Table ZA.2 — Attestation of conformity system

Product	Intended use	Level(s) or class(es)	Attestation of conformity system
Natural smoke and heat exhaust ventilators	Fire safety	-	1
System 1: See Construction Products Directive Annex III.2.(i), without audit testing of samples.			

The product certification body will certify the initial type testing of all characteristics given in Table ZA.1, in accordance with the provisions of 8.2 and for the initial inspection of the factory and of the factory production control, and for the continuous surveillance, assessment and approval of the factory production control, all characteristics shall be of interest to the approved body, see 8.3.

The manufacturer shall operate a factory production control system in accordance with the provisions of 8.3.

ZA.3 CE marking

The manufacturer or his authorised representative established within the EEA is responsible for the affixing of the CE marking. The CE marking symbol to affix shall be in accordance with Directive 93/68/EC and shall be shown on the smoke and heat ventilator. In addition, the CE Marking shall appear on the packaging and/or on the accompanying commercial documents. The CE Marking shall contain items a), b), e), f), g), and h) of clause 9 where item g) may be codified and includes the A option where relevant, and the:

— identification number of the certification body ;

— date of affixing of the CE marking ;

— number of the certificate of conformity ;

— reaction to fire.

Figure Z.A.1 gives an example of the information to be given on the commercial documents.

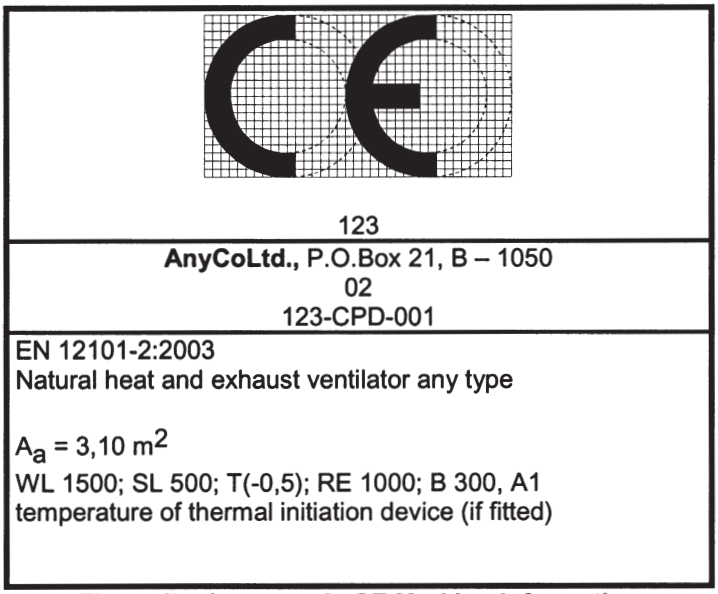

Figure ZA.1 - Example CE Marking information

In addition to any specific information relating to dangerous substances shown above, the product should also be accompanied, when and where required and in the appropriate form, by documentation listing any other legislation on dangerous substances for which compliance is claimed, together with any information required by that legislation.

NOTE European legislation without national derogations need not be mentioned.

ZA.4 EC certificate and declaration of conformity

The manufacturer or his agent established in the EEA, shall prepare and retain a declaration of conformity, which authorises the affixing of the CE marking. This declaration shall include:

— name and address of the manufacturer, or his authorised representative established in the EEA, and the place of production;

— description of the product (type, identification, use), and a copy of the information accompanying the CE marking;

— provisions to which the product conforms (i.e. annex ZA of this EN);

— particular conditions applicable to the use of the product [if necessary];

— name and address (or identification number) of the approved body (bodies);

— name of, and position held by, the person entitled to sign the declaration on behalf of the manufacturer or his authorised representative.

For characteristics where certification is required (system 1), the declaration shall contain a certificate of conformity with, in addition to the information above, the following information:

— the name and address of the certification body;

— the certificate number;

— conditions and period of validity of the certificate, where applicable;

— name of, and position held by, the person entitled to sign the certificate.

Duplication of information between the declaration and certificate shall be avoided. The declaration and certificate shall be presented in the language(s) of the Member State of use of the product.

Bibliography

EN ISO 9001, *Quality management systems - Requirements (ISO 9001:2000).*