Script to the arrangement of information to DIN 18232-2

Summary

SHEV and air supply as per DIN

Visualized explanation of DIN 18232-2

Height of the area – Definition

Sheet 1

1.

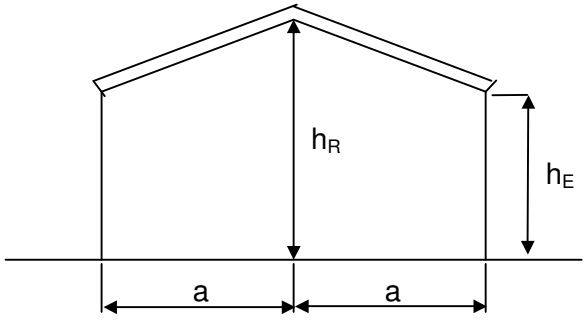

$$h = \frac{h_R + h_E}{2}$$

2.

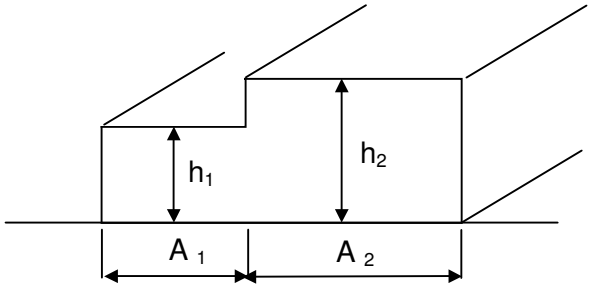

$$h = \frac{h_1 \times A_1 + h_2 \times A_2 + \ldots}{A_{Total}}$$

$$A_{Total} = A_1 + A_2 + \ldots$$

3.

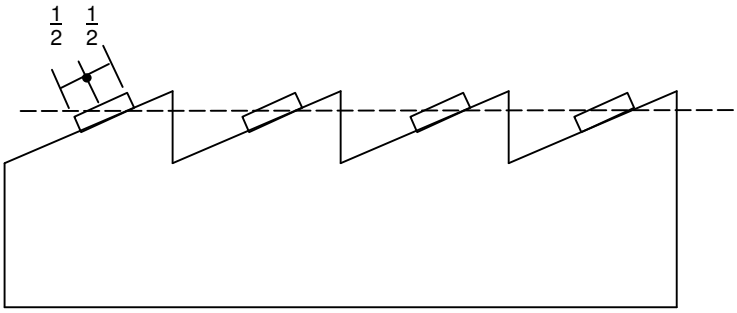

3.

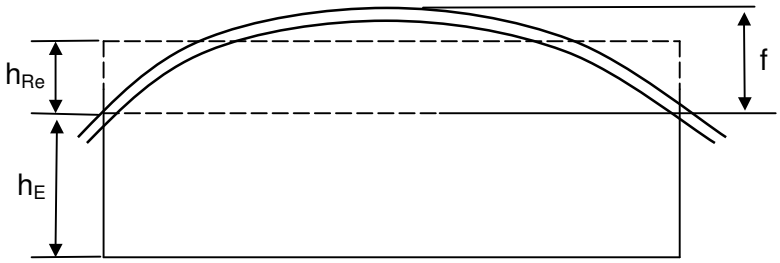

$$h = h_{Re} + h_E$$

$$h = \mathbf{2/3} \times f + h_E$$

approximate value

Visualized explanation of DIN 18232-2

Aimed height of the smoke free layer

Sheet 2

a) minimum height

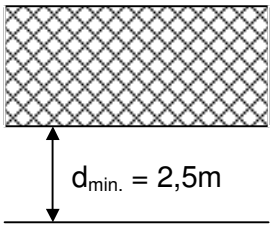

b) with smoke aprons (A_{SS} > 1600 m²)

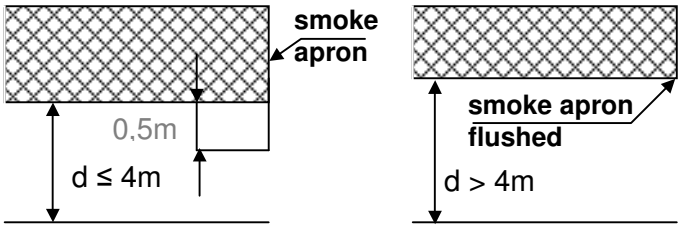

c) Consideration of objects sensitive to smoke

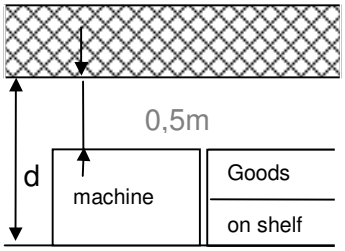

d) after air intakes (ai)

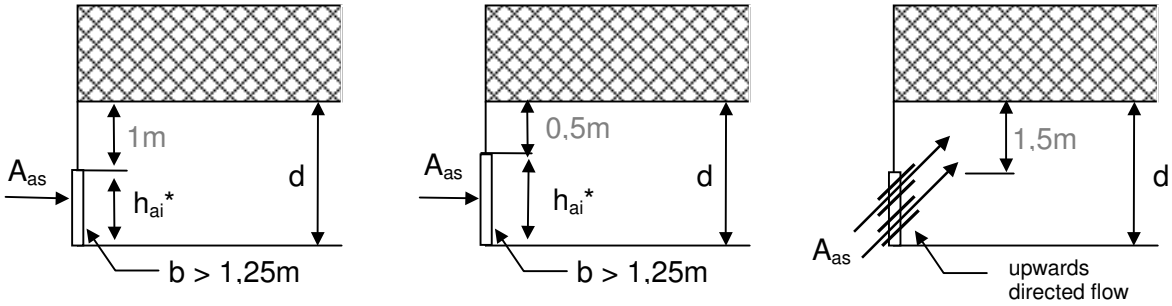

e) with use of the supply air coefficient

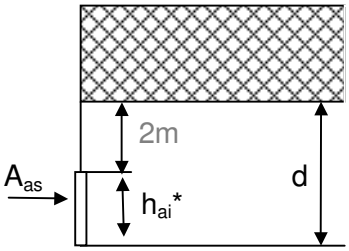

*) non-standard:
h_{ai} : height floor to top edge air intake

Visualized explanation of DIN 18232-2

Smoke segment areas

Sheet 3

a) $A_{ss} \leq 1600$ m²

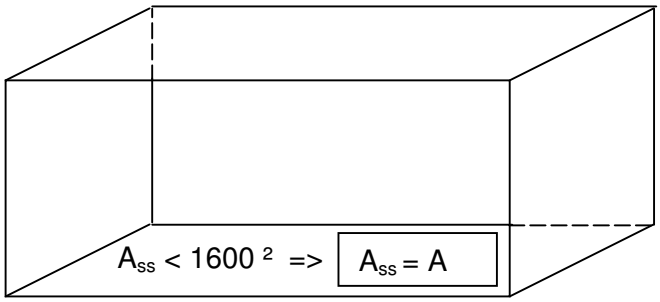

b) if $A_{ss} > 1600$ m²

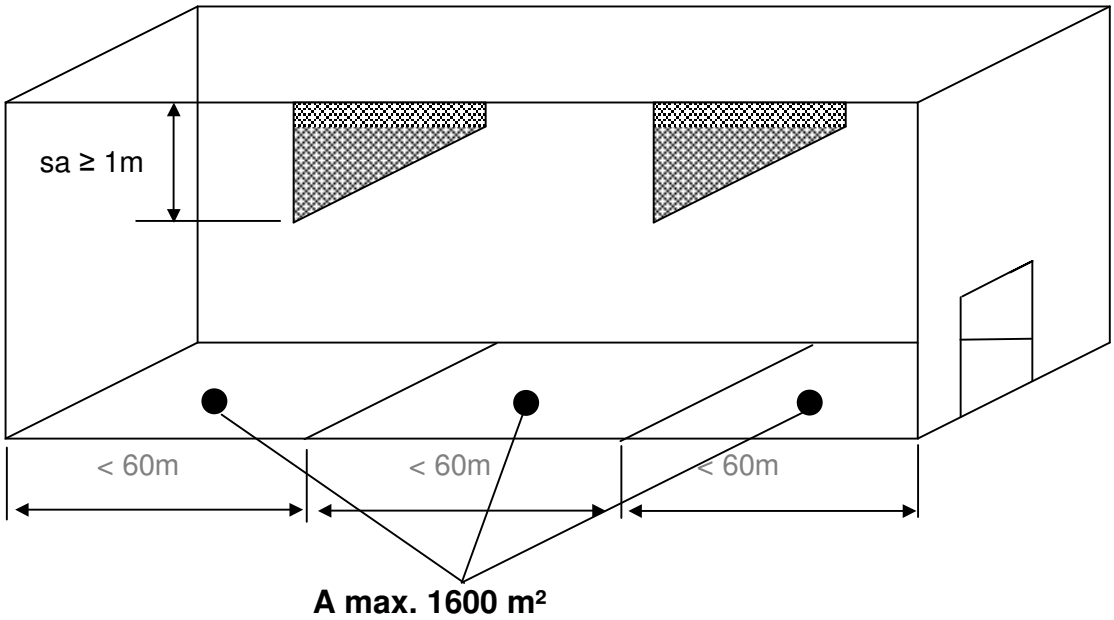

Visualized explanation of DIN 18232-2

Regulation of air supply

Sheet 4.1

a) state kind

$A_{ss} = A \leq 1600\ m^2$ → req. A_{as} = req. A_{SHEV} x 1,5

b) air supply distribution

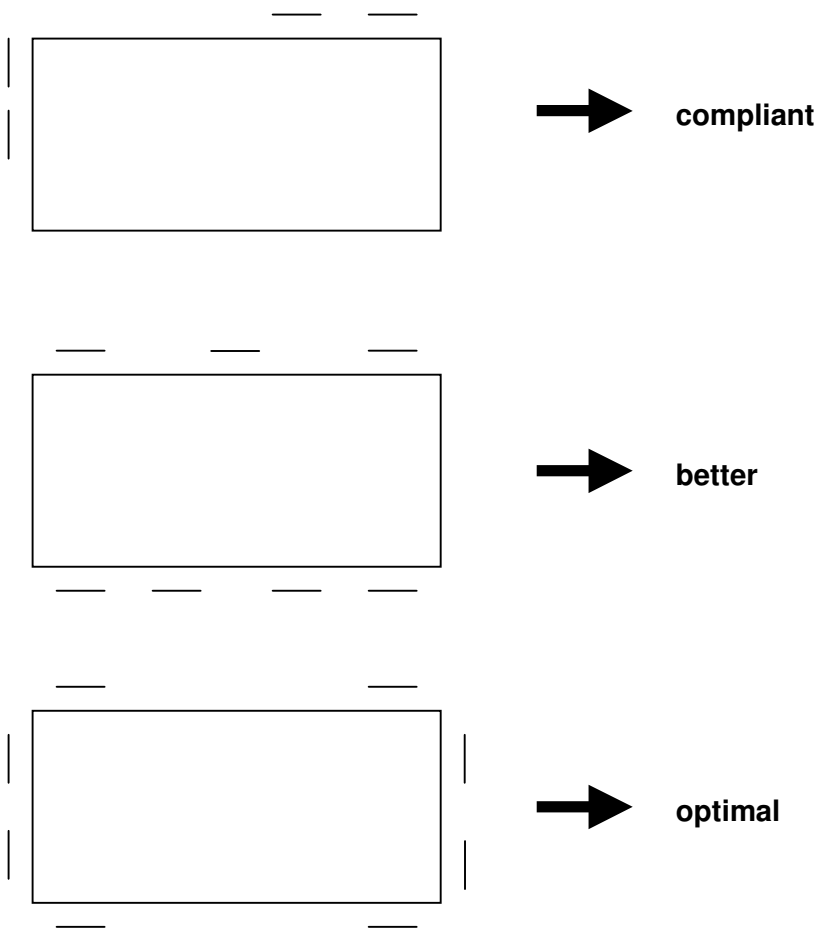

Principle for the arrangement of air supply:
The entry opening of the air supply should be arranged on at least two sides of the building and be distributed steadily.

Visualized explanation of DIN 18232-2

c)

A_{ss} > 1600 m²

h < 9m
or
BMG ≤ 3
e.g.
with sprinkler

req. A_{as} = req .$A_{SHEV_{max}}$ x 1,5

$A_{SHEV_{max}}$ = SHEV area

h < 9m
and
BMG ≤ 4 or 5

A ≤ 2600 m²

A ≤ 1600 m²

Relif A:

req. A_{as} = req. $A_{SHEV_{incr.}}$ x 1,5

For enlarged smoke segment
everything from 1600 m² to started
100 m² are raised by 10%.
DIN 18232-2/ 6.2 / sheet 16

Relif B:

req. A_{as} = req. minimum $A_{SHEV_{max}}$ x 1,5

DIN 18232-2/ 6.2 /sheet 16

d) air supply coefficient

if

planned A_{as} < req. A_{as}

check whether correction possible or useful

more air supply required

Condition:

$d - h_{ai} \geq 2{,}0m$

No

or door-/ gate heights to be limited

Yes

req. $A_{as} = c_{ai}$ x req. $A_{SHEV_{max}}$

simultaneously

$c_{ai} = 1{,}5 \rightarrow 1{,}0$ / $c_{Sd} = 1{,}0 \rightarrow 1{,}5$

at least req. $A_{as} = 1{,}0$ x req. $A_{SHEV_{max}}$ + req. $A_{SHEV_{korr}} = 1{,}5$ x req. $A_{SHEV_{max}}$

Intervalues from c_{ai} and c_{Sd} must fulfil computationally the following condition:

$$c_{ai} + c_{Sd} = 2{,}5$$

Note:
$A_{SHEV\ max}$ points out to the fact that this S_d-area lies of the largest (max) smoke segment area!

for example:

req. $A_{as} = 1.1$ x req. $A_{SHEV_{max}}$

req. $A_{SHEV_{korr}} = 1.4$ x req. $A_{SHEV_{max}}$

voted

2,5 - 1,1

e) Coefficients according to DIN 18232-2 (06/03):

Table 1 – Coefficients c_Z for different opening kinds of air intakes

Opening types	opening angles	coefficient
Doorways or gate openings, machine grid		0,7
Opening Ventilation blinds	90°	0,65
Rotary wing or tilting wing	90°	0,65
Rotary wing or tilting wing	≥ 60°	0,5
Rotary wing or tilting wing	≥ 45°	0,4
Rotary wing or tilting wing	≥ 30°	0,3

A divergence of the given opening angles of +/- 5° is allowed!

sample: window

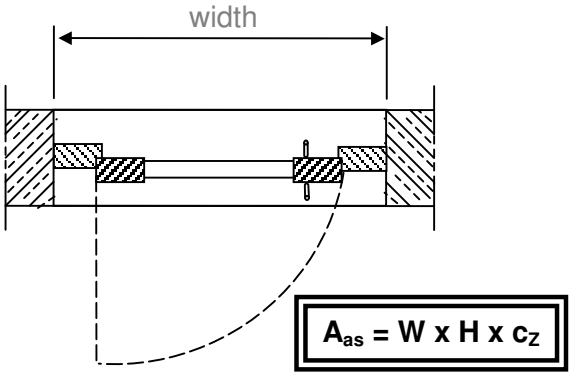

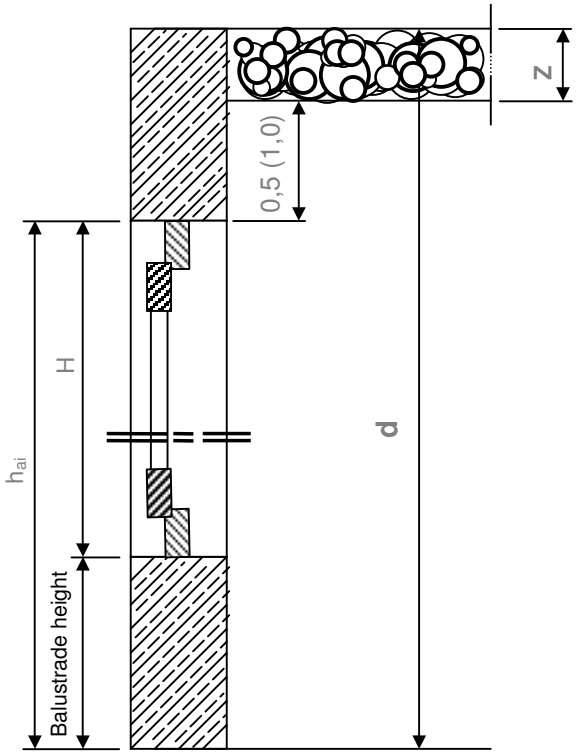

given:
W = 1,01m
H = 1,51m
(balustrade height = 0,90m

A_{as} = 1,01 x 1,51 x 0,65 = 0,99m²
h_{ai} = 0,9 + 1,51 = 2,41m

→ d = 2,41 + 0,5 = 2,91m → (DIN table 3 or sheet 6,0 – 6,4)

Visualized explanation of DIN 18232-2

Requirements for air intakes

Sheet 4.5

Following conditions
are to be followed according to DIN 18232-2 (5.5 air supply areas) absolutely for the assertion as air intakes:

1. Gates, doors and windows

– **Gates, doors and windows must be** marked from the inside and outside with signs accordingly DIN 4066.

red =

black = stroke

– **Gates doors and windows** to be opened without destruction from outside
for example: clutch olive (window fitting) also from the outside with lock possibility.
(Key in addition in the fire brigade-key depot)

No smashing of window panes or tearing of wall or gate surfaces.
This is not applicable if the company fire brigade can create air intakes accordingly.

– The air supply areas must immediately (automatically, by company fire brigade, by operational or organizational precautions) open after triggering of SHEV.

2. Independent air intakes

– **independent air intake devices must open merely immediately after triggering of SHEV what lies in the nature of the thing. (i.e. standard case for these devices)**

Examples from the LAMILUX – product range

Case A

all 90° opened → c_Z = 0,65

vertical section

B - air

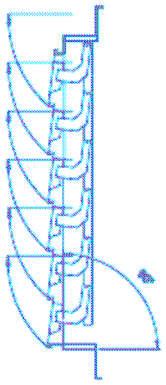

G - air

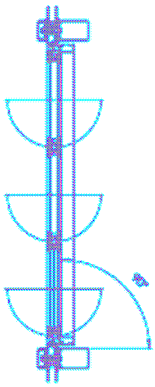

T - air

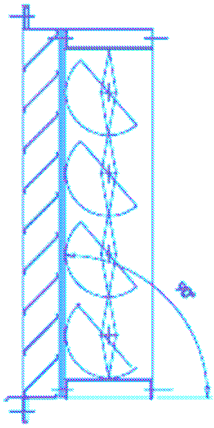

Case B

according to control/lifting height angle opening of 30° to 90° are possible → c_Z = 0,3 - 0,65

vertical section

K - air

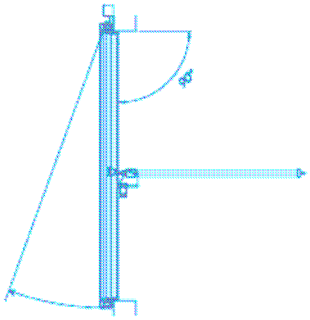

R - air

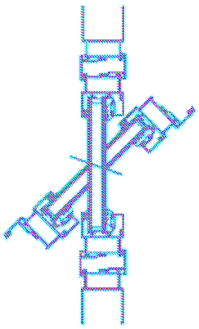

Visualized explanation of DIN 18232-2

Table 2 – calculation groups

To be attached fire-development-duration minutes	Calculation group with a fire propagation speed		
	extra low	*middle*	*extra height*
≤ 5	1	2	3
≤ 10	2	3	4
≤ 15	3	4	5
≤ 20[a]	4	5	5[b]
≤ 20	5	5[b]	5[b]

a Average values without special proof; by the use of these average values the calculation group 5 arises, on this occasion (fat framed).

b In this case the protective purposes of this norm are not accessible only by SHEV. Other measures are necessary to attain the protective purposes.

Consideration of sprinkler systems:

If an exhaustive automatic sprinkler system is installed, the calculation group 3 can be attached with calculation group calculated after table 2 > 3 without proof.

Visualized explanation of DIN 18232-2

Calculation from A_{SHEV}

Sheet 6

LAMILUX

a)

BMG: Fire-development-duration + fire-propagation-speed > **DIN Table 2 : BMG**

---

b)

with h (sheet 7.0 – 7.1)
and d (sheet 7.0 – 7.1)
and BMG (sheet 5)
(sheet 7.0 – 7.1) > **DIN Table 3 : req. A_{SHEV}**

---

c) Relief:

if h ≥ 9m - BMG 4 or 5
and A_{ss} > 1600m² ; and h_{sa} at least m/1600m²
(no sprinkler)

A: A_{ss} > 1600 m²)
∧ (A << 2600 m²)

only sensibly with slight area excesses!

$$\text{req. } A^{S}_{SHEV_s} = \text{req. } A_{SHEV_s} + x \bullet \text{req. } A_{SHEV_s}$$

x = 0.1/0.2/..../1.0
ever started 100 m²
excess more than 1600 m²
+ 10% = 0.1

for example: S_f = 2112 m²
2112 – 1600 = 512m² ← *excess area*
512m² > 500m² → x = 0.6

B: A_{ss} > 1600 m²) ∧
∧ (A ≤ 1600 m²)

∧ h_{sa} = 1m

Control:

req. A_{SHEV_s} = 50 m² ∧ req. $A_{SHEV_f} = \sum$ req. A_{SHEV_s} ≥ req. A_{SHEV_s} (Tab. 3)

Otherwise: nec. $A^{B}_{W_{ss}}$ = nec. A_{W_R}

for example: A_{ss} = 2700 m² ➔ 2 smoke segments with A < 1600 m²

h = 12m
d = 11m
CG 5 >

req. A^{B}_{SHEV} = 2 x 50 m² = 100 m²
req. $S^{Tab.\ 3}_{SHEV}$ = 123 m² >

req. $S^{B}_{SHEV_{ss}}$ = 123 m² (Tab. 3)

Visualized explanation of DIN 18232-2

Required smoke deduction areas

Sheet 7.0

Table 3 – continuous – required A_{SHEV} [m²] per smoke segment

Height of the area *h* in m	Height of the smoke layer *z* in m	Height of the layer poor in smoke *d* in m	Calculation group 1	2	3	4	5
3,0	0,5	2,5	4,8	6,2	8,2	11,0	15,4
3,5	1,0	2,5	3,4	4,4	5,8	7,8	10,6
	0,5	3,0	6,9	8,7	11,3	15,0	20,4
4,0	1,5	2,5	2,8	3,6	4,7	6,4	8,9
	1,0	3,0	4,9	6,2	8,0	10,6	14,4
4,5	2,0	2,5	2,4	3,1	4,1	5,5	7,7
	1,5	3,0	4,0	5,0	6,5	8,7	11,8
	1,0	3,5	5,9	8,4	10,7	13,9	18,6
5,0	2,5	2,5	2,2	2,8	3,7	4,9	6,9
	2,0	3,0	3,4	4,4	5,7	7,5	10,2
	1,5	3,5	4,8	6,8	8,7	11,4	15,2
	1,0	4,0	7,1	10,3	13,8	17,7	23,4
5,5	3,0	2,5	2,0	2,5	3,3	4,5	6,3
	2,5	3,0	3,0	3,9	5,1	6,7	9,1
	2,0	3,5	4,2	5,9	7,5	9,8	13,1
	1,5	4,0	5,8	8,5	11,3	14,5	19,1
	1,0	4,5	8,2	12,2	17,4	22,2	28,8
6,0	3,5	2,5	1,8	2,3	3,1	4,2	5,8
	3,0	3,0	2,7	3,6	4,6	6,1	8,3
	2,5	3,5	3,7	5,3	6,7	8,8	11,8
	2,0	4,0	5,0	7,3	9,8	12,6	16,5
	1,5	4,5	6,7	10,0	14,0	18,1	23,5
	1,0	5,0	9,3	14,1	20,5	27,2	35,0
6,5	4,0	2,5	1,7	2,2	2,9	3,9	5,4
	3,5	3,0	2,6	3,3	4,3	5,7	7,7
	3,0	3,5	3,4	4,8	6,2	8,0	10,7
	2,5	4,0	4,5	6,5	8,7	11,2	14,8
	2,0	4,5	5,8	8,6	12,3	15,7	20,4
	1,5	5,0	7,6	11,4	16,7	22,2	28,6
	1,0	5,5	10,3	15,7	23,4	32,7	41,8
7,0	4,5	2,5	1,6	2,1	2,7	3,7	5,1
	4,0	3,0	2,4	3,1	4,0	5,3	7,2
	3,5	3,5	3,2	4,5	5,7	7,4	9,9
	3,0	4,0	4,1	6,0	8,0	10,2	13,5
	2,5	4,5	5,1	7,7	11,0	14,0	18,2
	2,0	5,0	6,6	9,9	14,5	19,2	24,7
	1,5	5,5	8,4	12,9	19,1	26,7	34,2
	1,0	6,0	11,9	17,3	26,3	38,5	49,4

Visualized explanation of DIN 18232-2

Required smoke deduction areas

Sheet 7.1

Table 3 – continuous – required A_{SHEV} [m²] per smoke segment

Height of the area *h* in m	Height of the smoke layer *z* in m	Height of the layer poor in smoke *d* in m	Calculation group 1	2	3	4	5
7,5	5,0	2,5	1,5	2,0	2,6	3,5	4,9
	4,5	3,0	2,2	2,9	3,8	5,0	6,8
	4,0	3,5	3,0	4,2	5,3	7,0	9,3
	3,5	4,0	3,8	5,5	7,4	9,5	12,5
	3,0	4,5	4,8	7,0	9,5	12,5	16,6
	2,5	5,0	5,9	8,8	13,0	17,2	22,1
	2,0	5,5	7,3	11,1	16,6	23,2	29,6
	1,5	6,0	9,7	14,1	21,4	31,4	40,3
	1,0	6,5	14,4	18,7	28,9	43,1	57,7
8,0	5,5	2,5	1,5	1,9	2,5	3,3	4,6
	5,0	3,0	2,1	2,8	3,6	4,8	6,5
	4,5	3,5	2,7	3,9	5,0	6,6	8,8
	4,0	4,0	3,6	5,2	6,9	8,9	11,7
	3,5	4,5	4,4	6,5	9,3	11,8	15,4
	3,0	5,0	5,4	8,1	11,9	15,4	20,2
	2,5	5,5	6,5	9,9	14,8	20,7	26,5
	2,0	6,0	8,4	12,2	18,6	27,2	34,9
	1,5	6,5	11,7	15,2	23,6	35,2	47,1
	1,0	7,0	17,1	19,9	31,4	47,7	66,8
8,5	6,0	2,5	1,4	1,8	2,4	3,2	4,4
	5,5	3,0	2,0	2,6	3,4	4,5	6,2
	5,0	3,5	2,7	3,7	4,8	6,2	8,3
	4,5	4,0	3,3	4,9	6,5	8,4	11,0
	4,0	4,5	4,1	6,1	8,7	11,1	14,1
	3,5	5,0	5,0	7,5	11,0	14,5	18,7
	3,0	5,5	5,9	9,1	13,5	18,9	24,1
	2,5	6,0	7,5	10,9	16,6	24,4	31,2
	2,0	6,5	10,2	13,2	20,5	30,5	40,8
	1,5	7,0	13,9	16,2	25,7	38,9	54,6
	1,0	7,5	20,0	22,0	33,7	52,1	67,7
9,0	6,5	2,5	1,3	1,7	2,3	3	4,3
	6,0	3,0	1,9	2,5	3,3	4,3	5,9
	5,5	3,5	2,5	3,6	4,5	5,9	7,9
	5,0	4,0	3,2	4,6	6,2	7,9	10,5
	4,5	4,5	3,9	5,7	8,2	10,4	13,6
	4,0	5,0	4,7	7,0	10,3	13,6	17,5
	3,5	5,5	5,5	8,4	12,5	17,5	22,4
	3,0	6,0	6,9	10,0	15,2	22,5	28,5
	2,5	6,5	9,1	11,8	18,3	27,3	36,5
	2,0	7,0	12,1	14,1	22,2	33,7	47,2
	1,5	7,5	16,4	17,9	27,5	24,5	62,6
	1,0	8,0	23,3	25,4	35,7	56,2	83,9

Visualized explanation of DIN 18232-2

Required smoke deduction areas

Sheet 7.2

Table 3 – continuous – required A_{SHEV} [m²] per smoke segment

Height of the area *h* in m	Height of the smoke layer *z* in m	Height of the layer poor in smoke *d* in m	Calculation group 1	2	3	4	5
9,5	7,0	2,5	1,3	1,7	2,2	3,0	4,1
	6,5	3,0	1,9	2,4	3,1	4,2	5,7
	6,0	3,5	2,4	3,4	4,4	5,7	7,6
	5,5	4,0	3,0	4,4	5,9	7,6	10
	5,0	4,5	3,7	5,5	7,8	9,9	12,9
	4,5	5,0	4,4	6,6	9,7	12,8	16,5
	4,0	5,5	5,1	7,8	11,7	16,4	20,9
	3,5	6,0	6,4	9,2	14,0	20,6	26,4
	3,0	6,5	8,3	10,8	16,7	24,9	33,3
	2,5	7,0	10,8	12,6	19,9	30,1	42,3
	2,0	7,5	14,2	15,5	23,8	36,8	54,1
	1,5	8,0	19,1	20,7	29,1	45,9	68,5
	1,0	8,5	26,9	29,2	37,4	60,1	91,1
10,0	7,5	2,5	1,2	1,6	2,1	2,9	4,0
	7,0	3,0	1,8	2,3	3,0	4,0	5,5
	6,5	3,5	2,3	3,3	4,2	5,5	7,3
	6,0	4,0	2,9	4,2	5,6	7,2	9,5
	5,5	4,5	3,5	5,2	7,4	9,5	12,3
	5,0	5,0	4,2	6,3	9,2	12,1	15,6
	4,5	5,5	4,8	7,4	11,1	15,4	19,7
	4,0	6,0	6,0	8,6	13,1	19,3	24,7
	3,5	6,5	7,7	10,0	15,5	23,1	30,9
	3,0	7,0	9,8	11,5	18,2	27,5	38,6
	2,5	7,5	12,7	13,9	21,3	32,9	48,4
	2,0	8,0	16,5	18,0	25,2	39,7	59,3
	1,5	8,5	22,0	23,8	30,5	49,1	74,4
	1,0	9,5	30,9	33,2	38,7	63,7	98,2
10,5	8,0	2,5	1,2	1,6	2,0	2,8	3,8
	7,5	3,0	1,7	2,3	2,9	3,9	5,3
	7,0	3,5	2,2	3,2	4,0	5,3	7,0
	6,5	4,0	2,8	4,1	5,4	7,0	9,2
	6,0	4,5	3,4	5,0	7,1	9,0	11,8
	5,5	5,0	4,0	6,0	8,8	11,6	14,9
	5,0	5,5	4,6	7,1	10,5	14,6	18,7
	4,5	6,0	5,6	8,1	12,4	18,2	23,3
	4,0	6,5	7,2	9,3	14,5	21,6	28,9
	3,5	7,0	9,1	10,6	16,8	23,5	35,7
	3,0	7,5	11,6	12,7	19,5	30,4	44,2
	2,5	8,0	14,6	16,6	22,6	35,5	53,7
	2,0	8,5	19,1	20,6	26,4	42,5	64,4
	1,5	9,0	25,2	27,1	31,6	52,0	80,2
	1,0	9,5	35,1	37,6	41,7	67,8	104,9

Visualized explanation of DIN 18232-2

Required smoke deduction areas

Sheet 7.3

Table 3 – continuous – required A_{SHEV} [m²] per smoke segment

Height of the area *h* in m	Height of the smoke layer *z* in m	Height of the layer poor in smoke *d* in m	Calculation group 1	2	3	4	5
11,0	8,5	2,5	1,2	1,5	2,0	2,7	3,7
	8,0	3,0	1,7	2,2	2,8	3,7	5,1
	7,5	3,5	2,1	3,1	3,9	5,1	6,8
	7,0	4,0	2,7	3,9	5,2	6,7	8,8
	6,5	4,5	3,2	4,8	6,8	8,7	11,3
	6,0	5,0	3,8	5,7	8,4	11,1	14,3
	5,5	5,5	4,4	6,7	10,0	14,0	17,8
	5,0	6,0	5,3	7,7	11,7	17,2	22,1
	4,5	6,5	6,8	8,8	13,6	20,3	27,2
	4,0	7,0	8,5	9,9	15,7	23,8	33,4
	3,5	7,5	10,7	11,7	18,1	27,8	40,9
	3,0	8,0	13,5	14,7	20,6	32,5	48,4
	2,5	8,5	17,0	18,4	23,6	38,0	57,6
	2,0	9,0	21,8	23,5	27,4	45,0	69,4
	1,5	9,5	28,7	30,7	34,0	54,6	85,7
	1,0	10,0	39,7	42,4	46,7	69,6	111,4
11,5	9,0	2,5	1,1	1,5	1,9	2,6	3,6
	8,5	3,0	1,6	2,1	2,7	3,6	4,9
	8,0	3,5	2,1	3,0	3,8	4,9	6,6
	7,5	4,0	2,6	3,8	5,0	6,5	8,5
	7,0	4,5	3,1	4,6	6,6	8,4	10,9
	6,5	5,0	3,7	5,5	8,1	10,7	13,7
	6,0	5,5	4,2	6,4	9,6	13,4	17,1
	5,5	6,0	5,1	7,4	11,2	16,4	21,1
	5,0	6,5	6,4	8,4	12,9	19,3	25,8
	4,5	7,0	8,0	9,4	14,8	22,5	31,5
	4,0	7,5	10,0	11,0	16,7	26,0	38,3
	3,5	8,0	12,5	13,6	19,1	30,0	44,8
	3,0	8,5	15,6	16,8	21,6	34,7	52,6
	2,5	9,0	19,5	21,0	24,5	40,3	62,1
	2,0	9,5	24,8	26,6	29,5	47,3	74,2
	1,5	10,0	32,4	34,6	38,1	56,8	90,9
	1,0	10,5	44,7	47,5	52,0	71,9	117,4

Visualized explanation of DIN 18232-2

Table 3 – continuous – required A_{SHEV} [m²] per smoke segment

Height of the area *h* in m	Height of the smoke layer *z* in m	Height of the layer poor in smoke *d* in m	Calculation group 1	2	3	4	5
12,0[b]	9,5	2,5	1,1	1,4	1,9	2,5	3,5
	9,0	3,0	1,6	2,1	2,7	3,5	4,8
	8,5	3,5	2,0	2,9	3,7	4,8	6,4
	8,0	4,0	2,5	3,7	4,9	6,3	8,3
	7,5	4,5	3,0	4,5	6,4	8,1	10,35
	7,0	5,0	3,5	5,3	7,8	10,3	13,2
	6,5	5,5	4,0	6,2	9,2	12,8	16,4
	6,0	6,0	4,9	7,1	1037	15,7	20,2
	5,5	6,5	6,1	8,0	12,3	18,4	24,6
	5,0	7,0	7,6	8,9	14,1	21,3	29,9
	4,5	7,5	9,5	10,4	15,6	24,5	36,1
	4,0	8,0	11,7	12,7	17,8	28,1	42,0
	3,5	8,5	14,4	15,6	20,0	32,1	48,7
	3,0	9,0	17,8	19,2	22,3	36,8	56,7
	2,5	9,5	22,2	23,8	26,4	42,3	66,4
	2,0	10,0	28,1	30,0	33,0	49,2	78,8
	1,5	10,5	36,5	38,8	42,5	58,7	95,4
	1,0	11,0	49,9	53,0	57,8	73,7	123,0

A In the case of inter values the higher value haste be chosen.

B For rooms higher than 12 m, values of 12 m high rooms to be used if the height of the respective layer poor in smoke is respected.

REMARK The A_{SHEV}-values given in this table contain no security surcharges.

Visualized explanation of DIN 18232-2

Tips to the installation position

Sheet 8

Principles:

- Distances in meters
- 1 SHEV / 200m²
- even distribution
- a bigger number of + smaller sizes of SHEV's!

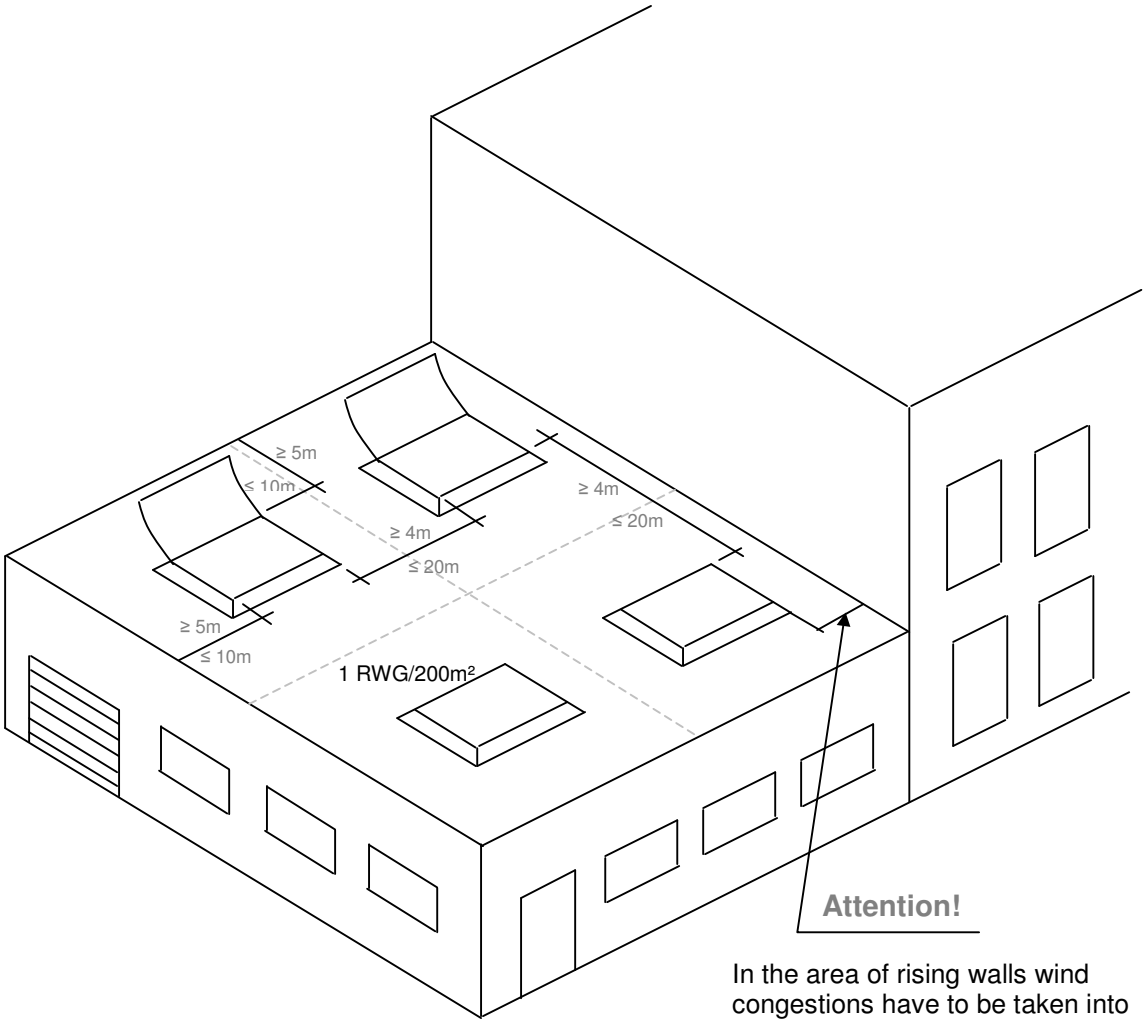

In the area of rising walls wind congestions have to be taken into account!
Minimum distance recommended: > 5m

Visualized explanation of DIN 18232-2

Control – smaller side length

Sheet 9

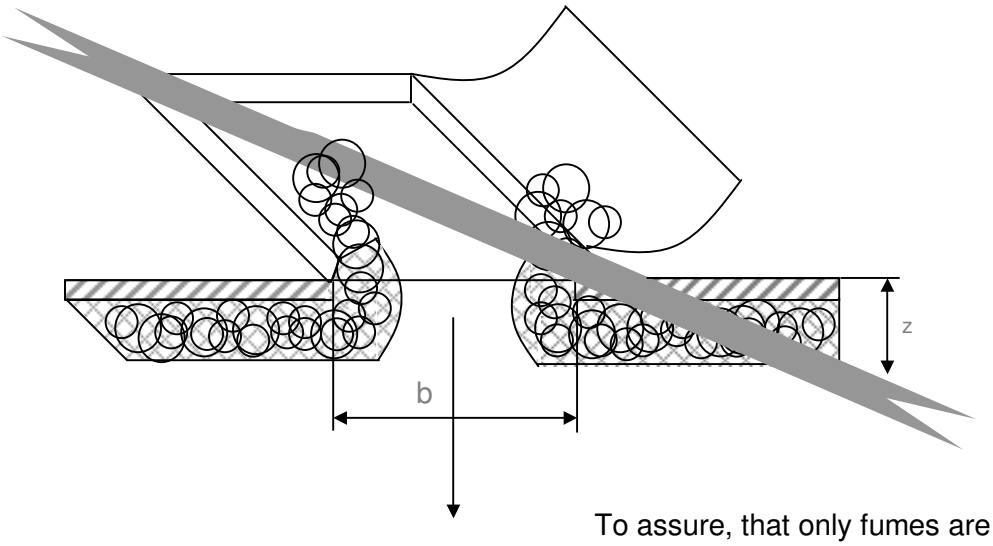

To assure, that only fumes are exhausted, not smoke free air!

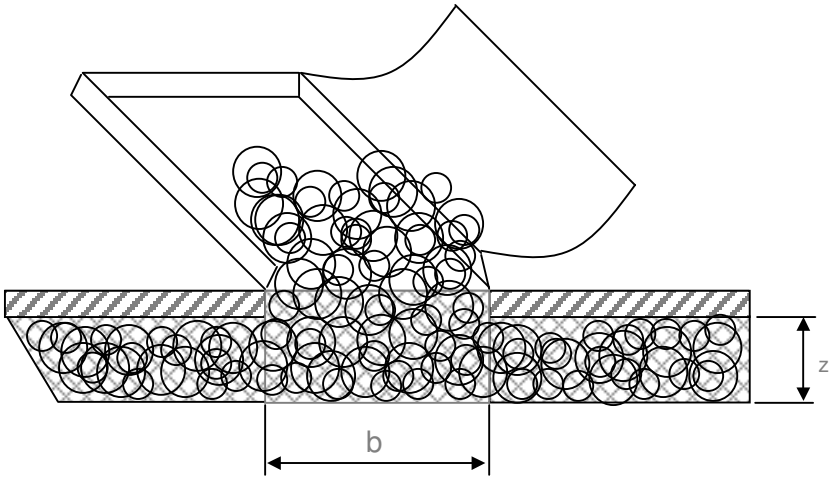

$$\text{max. } b = 1{,}5 \times z^{1/2} = 1{,}5 \times \sqrt{z}$$

<u>Borderline cases for b:</u>

$z = 4m$: max $b = 1{,}5 \times \sqrt{4} = 1{,}5 \times 2 = 3$ m

$z = 1m$: max $b = 1{,}5 \times \sqrt{1} = 1{,}5 \times 1 = 1{,}5$m

or consequences on the device choice:

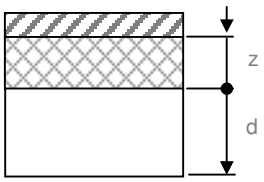

smoke layer thickness z		smaller side length RWG b
1m ≤ z < 1,44m	➔	max. b = 150 cm
1,44m ≤ z < 1,78m	➔	max. b = 180 cm
1,78m ≤ z < 2,78m	➔	max. b = 200 cm
z ≥ 2,78m	➔	max. b = 250cm

Segment C – Information!

→ "present state of the discussion"!

req. A_{SHEV}^{Wall} = req. A_{SHEV}^{Roof} x 2

req. A_{as}^{Wall} = req. A_{as}^{Roof} x 2

Installation position:

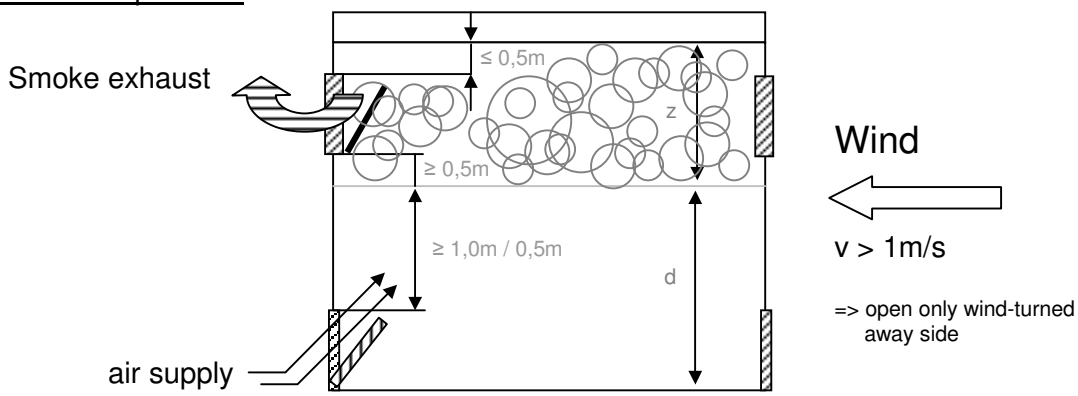

With v < 1m/s => all SHEV + air supply areas are

Plan:

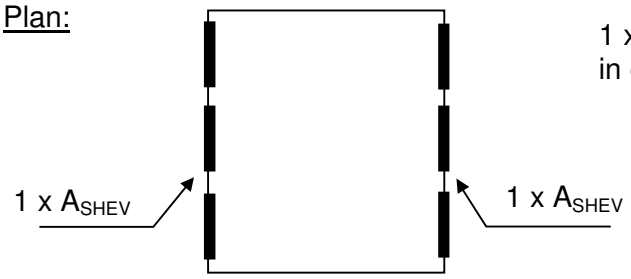

1 x A_{SHEV} in 2 opposite outer walls in each case of a smoke segment!

A_{SHEV} – area:
Either proof according to appendix A by means of check of the aerodynamic effectiveness or according to the following table values:

Table C.1 – Flow evaluates for different opening kinds

Opening typs	apex angle	Flow evaluates
Completely open surface		0,8
Venetian blinds	90°	0,65
Rotary wing or tilting wing	≥ 60°	0,5
Rotary wing or tilting wing	≥ 45°	0,4
Rotary wing or tilting wing	≥ 30°	0,3

Concepts / Abbreviations

SHEV = smoke and heat exhaust ventilation system
A = area
A_{ss} = smoke segment area
A_{SHEV} = needed SHEV area
A_{as} = size of the air supply areas
$A_{SHEV_{max}}$ = biggest SHEV area [m²]
$A_{SHEV_{incr.}}$ = increase SHEV area [m²]
h = middle space height [m]
h_{ai} = height air intake [m]
h_E = height roof (Eaves) [m]
h_R = height roof (Ridge) [m]
h_{Re}= height of accepted rectangle [m]
h_{sa} = height of the smoke apron [m]
d = height of the layer [m]
d_{lh} = least height of the layer [m]
sa = abbreviation for smoke apron
BMG = abbreviation for calculation group
c_{ai} = correction factor for air intakes
c_{Sd} = correction factor for smoke deduction surfaces
z = height of the smoke layer (h – d) [m]
b = breadth of the SHEV
maxb = maximum breadth of the SHEV's [m]
c_V = factor SHEV for regulation of the S_d- surface from the S_{geo}- surface
c_Z = factor for the regulation of the air supply areas
req. = required